weka

Montage-, Bedienungs- und Wartungsanleitung

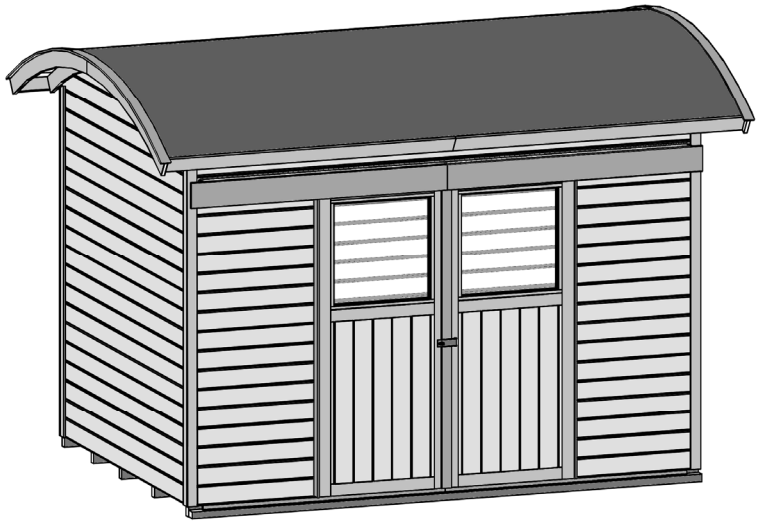

Art.-Nr.: 228.3021.10401
Art.-Nr.: 228.3021.13401
Art.-Nr.: 228.3021.15401

800.0286.16.48
800.0286.20.02

Stand: 2636

Pos	Bild	Abmessung	Stück
1	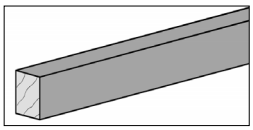	45/70/2950	5
2	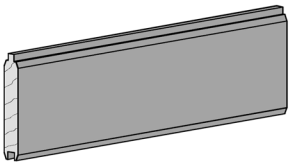	21/121/720	32
3	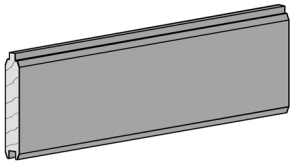	21/121/704	8
4	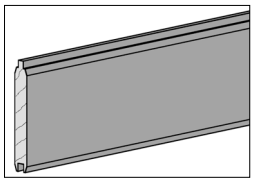	21/121/2050	38
5	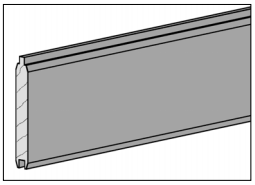	21/121/2950	20
6	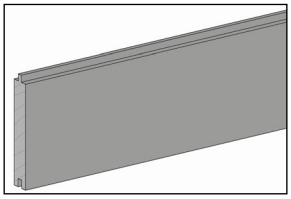	15,5/96/2050	34

 © Copyright HRB3662

Pos	Bild	Abmessung	Stück
7	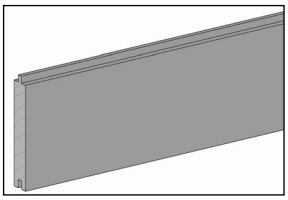	15,5/96/1700	62
8	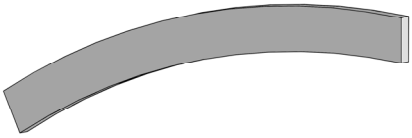	22/96/1246	13
9	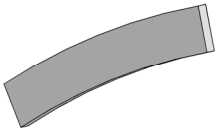	22/96/629	6
10	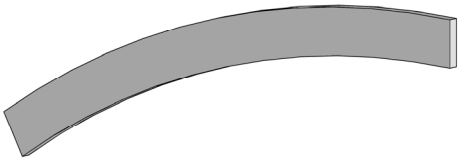	18,5/96/1304	4
11	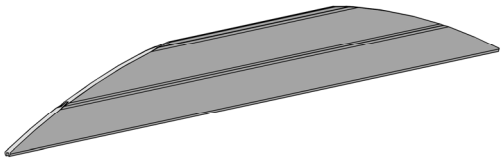	21/234/2050	2
12		750 x 1800	2

 © Copyright HRB3662

Pos	Bild	Abmessung	Stück
13	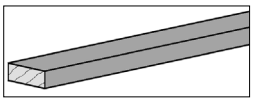	15/45/1775	4
14	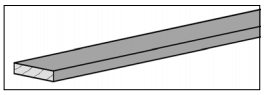	11/58/1825	10
15	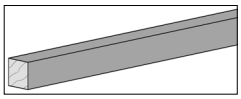	34/34/2462	7
16	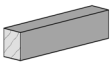	34/34/180	12
17	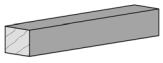	34/34/638	2
18	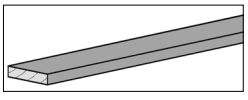	11/58/2300	8

 © Copyright HRB3662

Pos	Bild	Abmessung	Stück
19	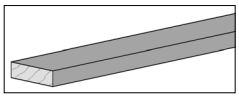	18,5/70/1810	3
20	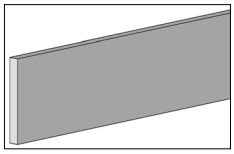	18,5/146/1500	2
21	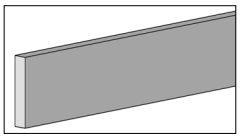	18,5/96/1700	4
22	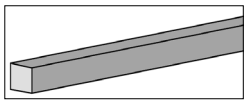	15/21/1805	1
23	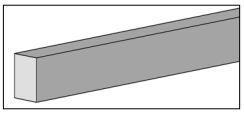	40/60/2860	1
24	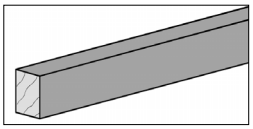	45/45/2950	1

© Copyright HRB3662

Pos	Bild	Abmessung	Stück
25	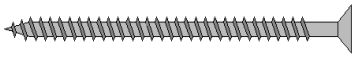	5,0 x 80	10
26	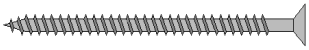	4,0 x 60	40
27	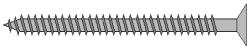	4,0 x 40	560
28	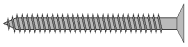	3,5 x 35	150
29		3,5 x 30	100
30		3,5 x 25	71

 © Copyright HRB3662

Pos	Bild	Abmessung	Stück
-	-	-	-
32		2,2 x 55	730
33		1,6 x 30	10
34	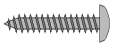	2,5 x 16	2
35			1
36	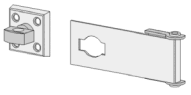	110 x 40	1

 © Copyright HRB3662

Pos	Bild	Abmessung	Stück
37	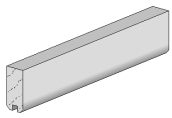		4
38	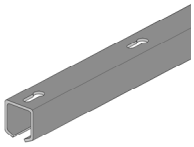	1420mm	2
39	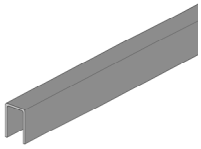	1420mm	2
40	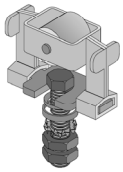		4
41	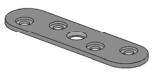		4
42			4
43	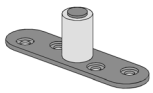		4

 © Copyright HRB3662

1.

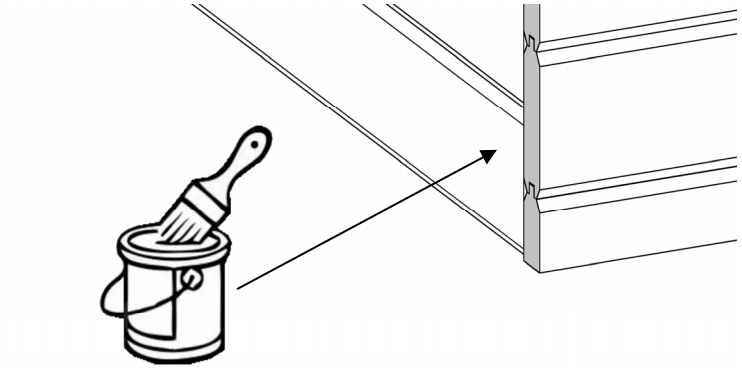

2.

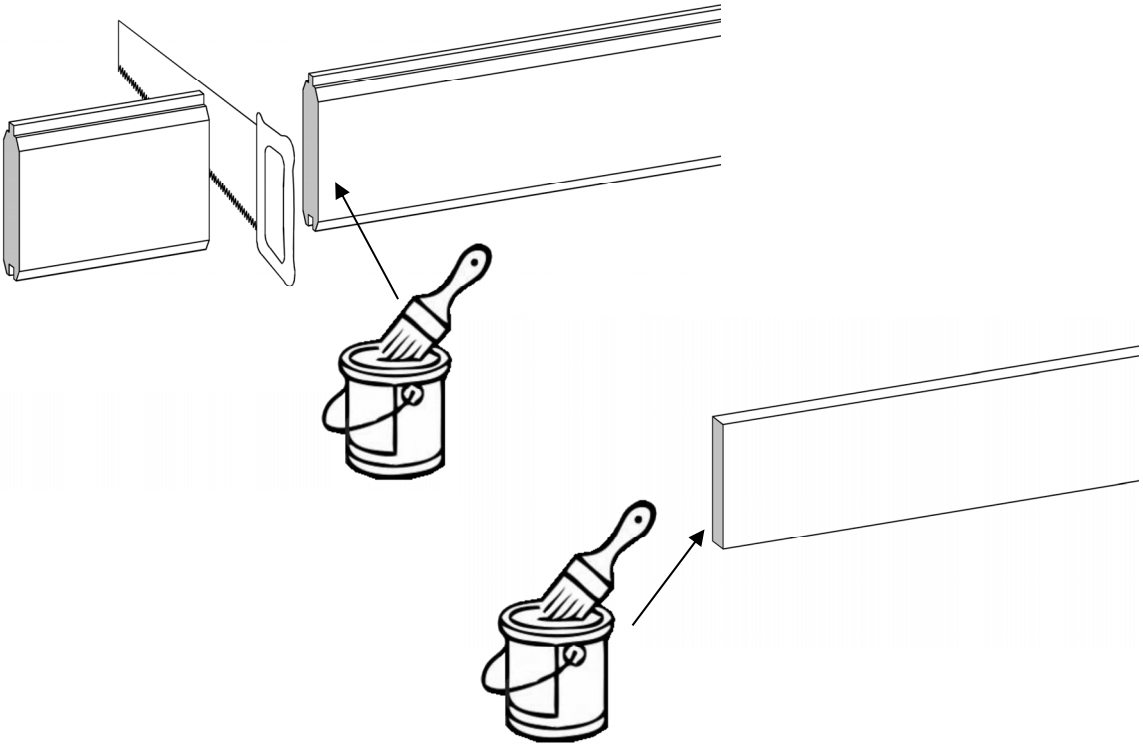

3.

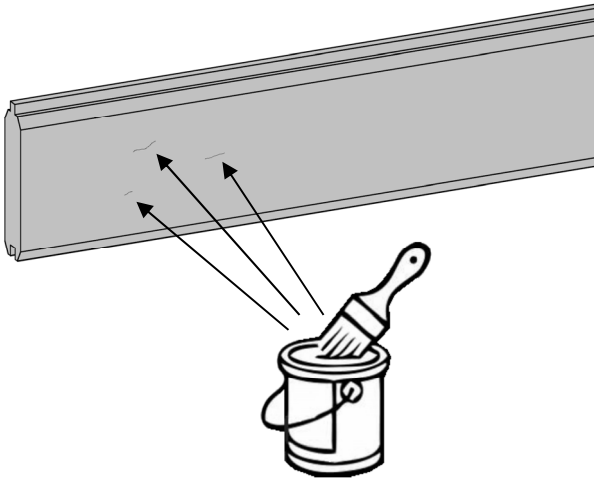

 © Copyright HRB3662

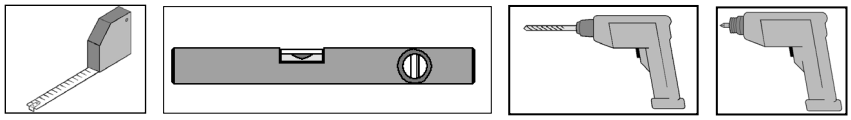

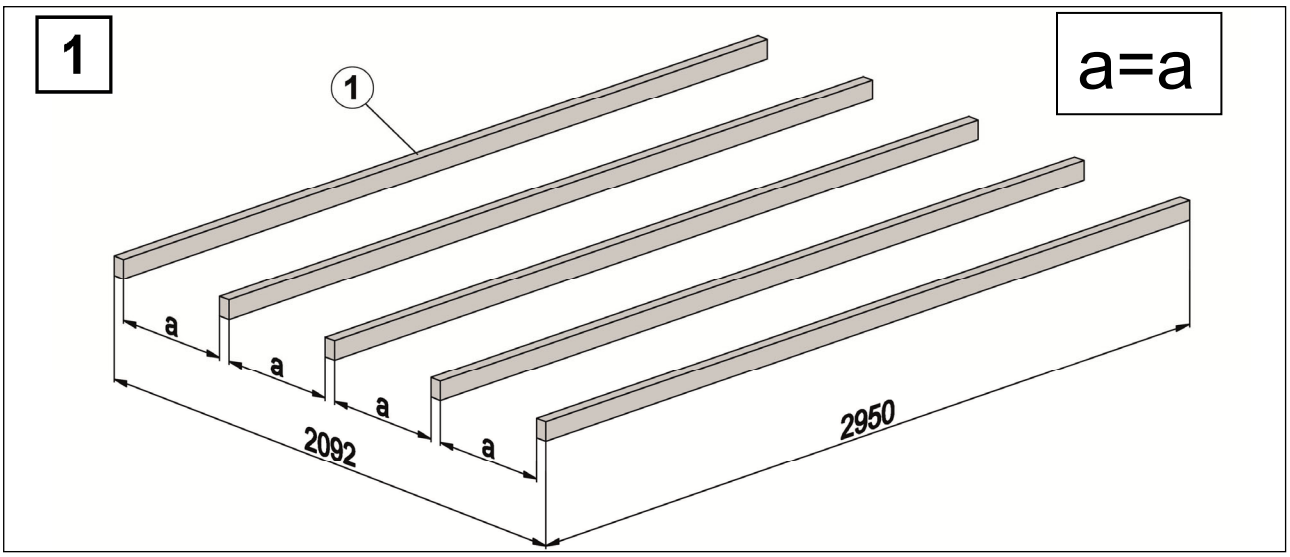

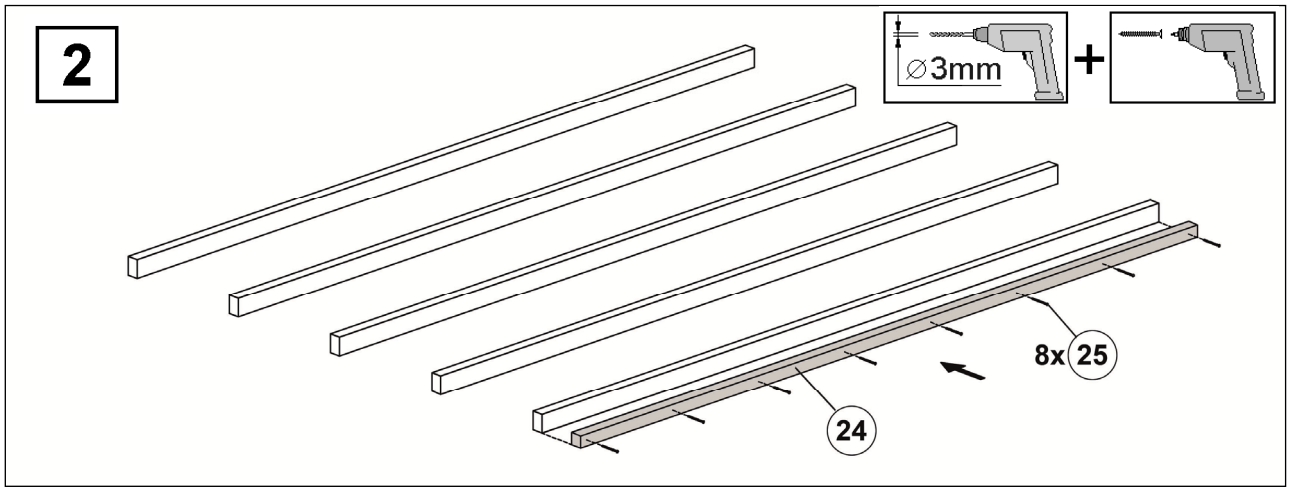

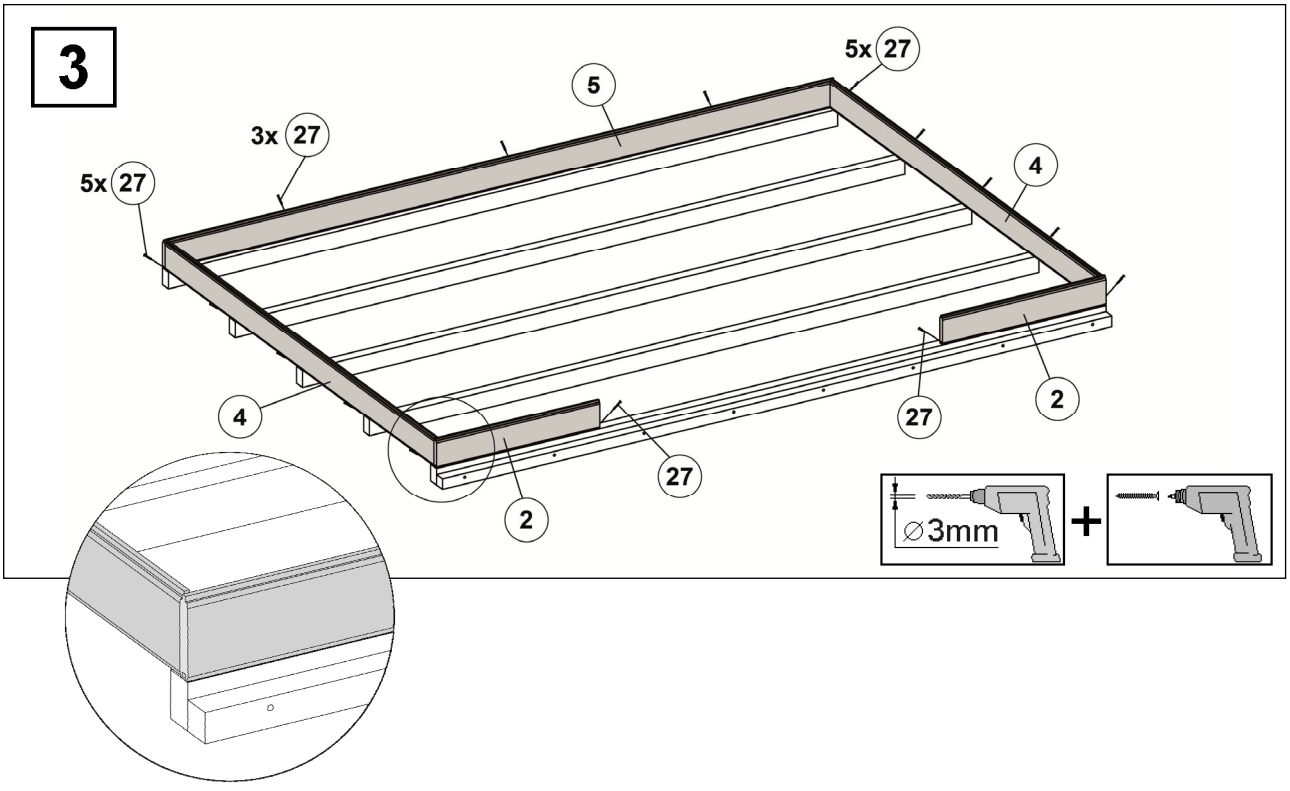

 © Copyright HRB3662

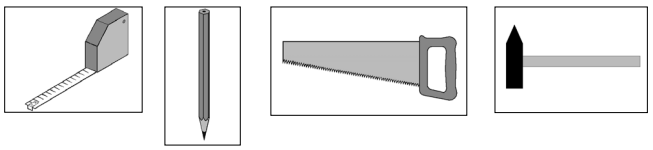

4

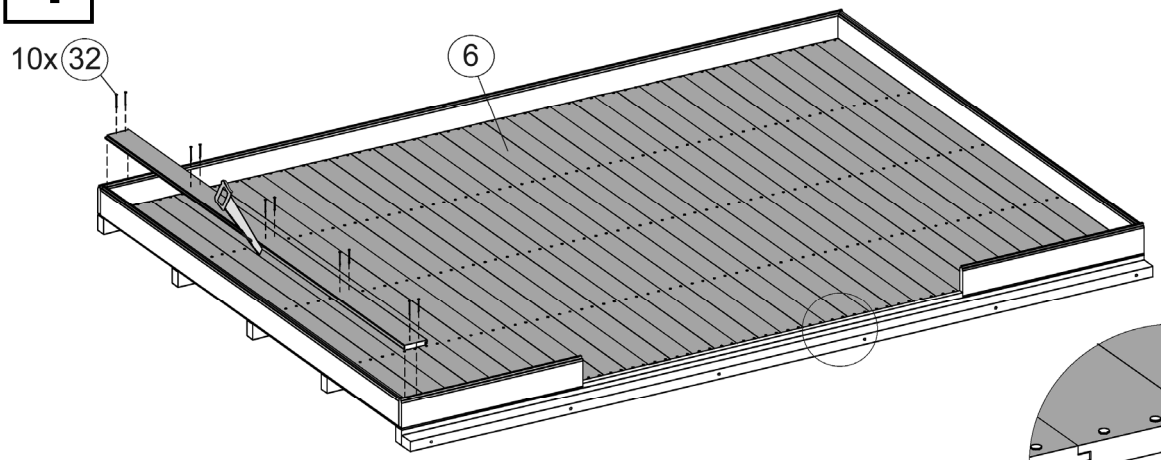

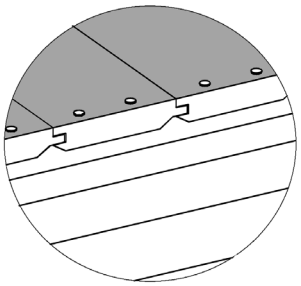

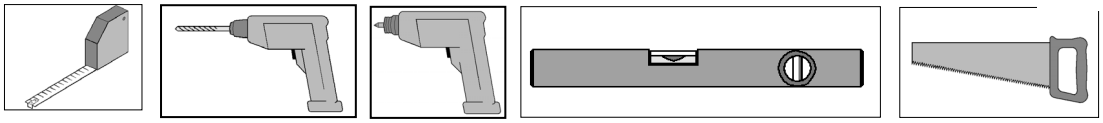

5

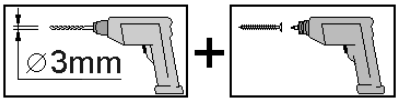

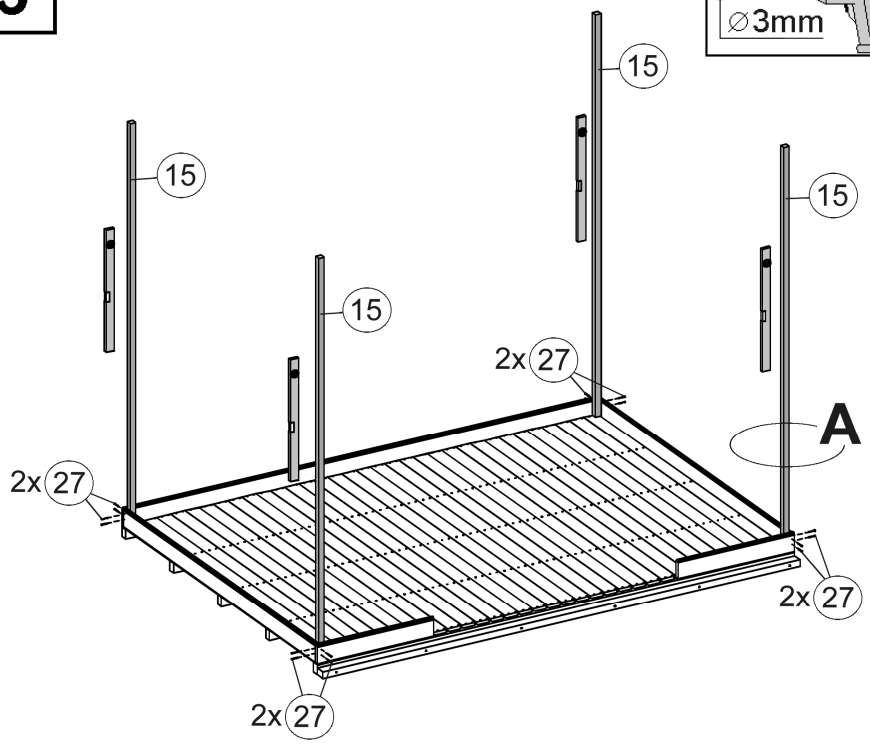

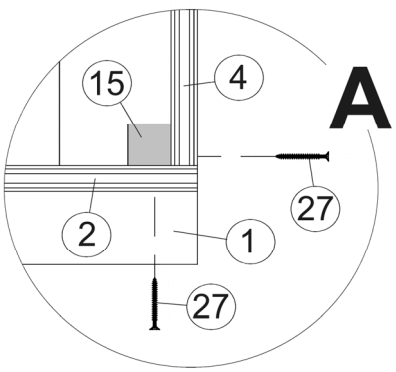

 © Copyright HRB3662

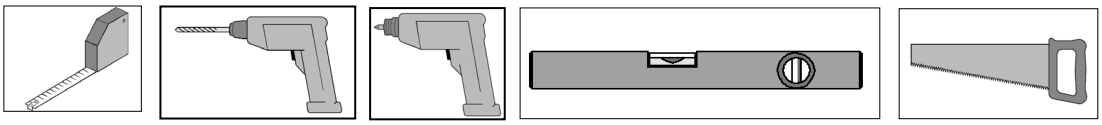

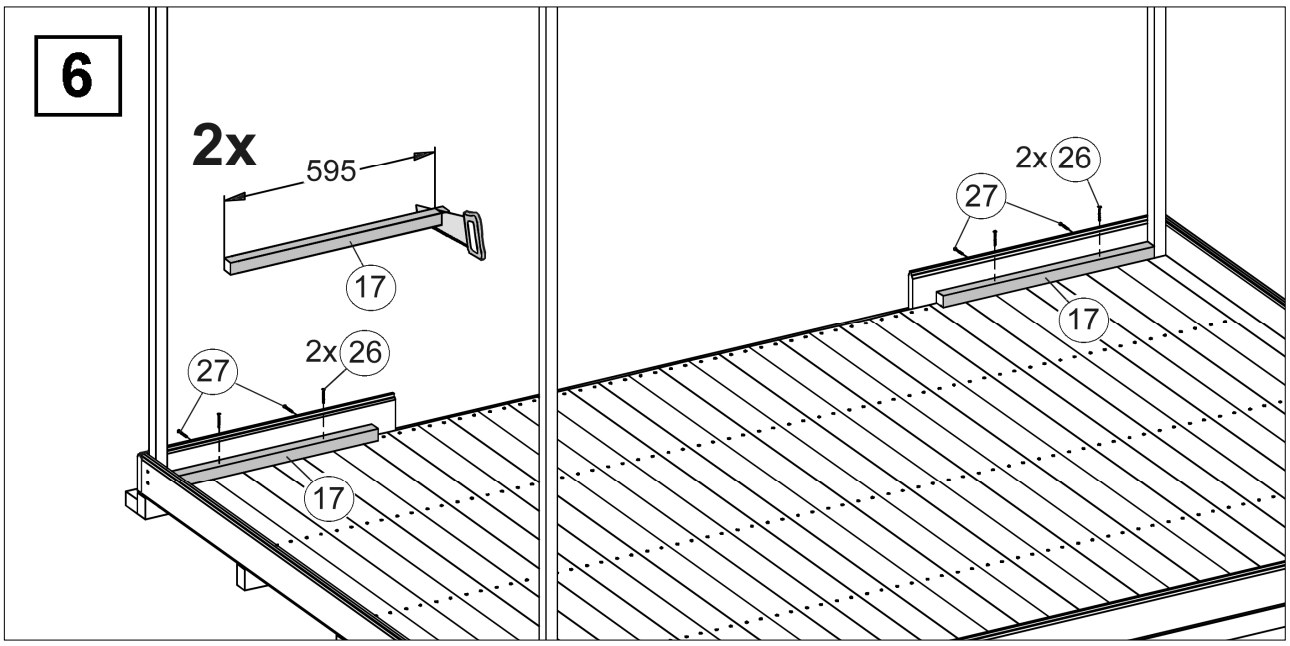

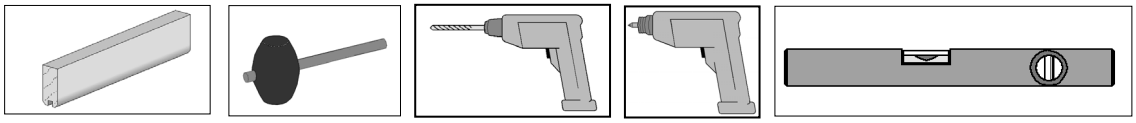

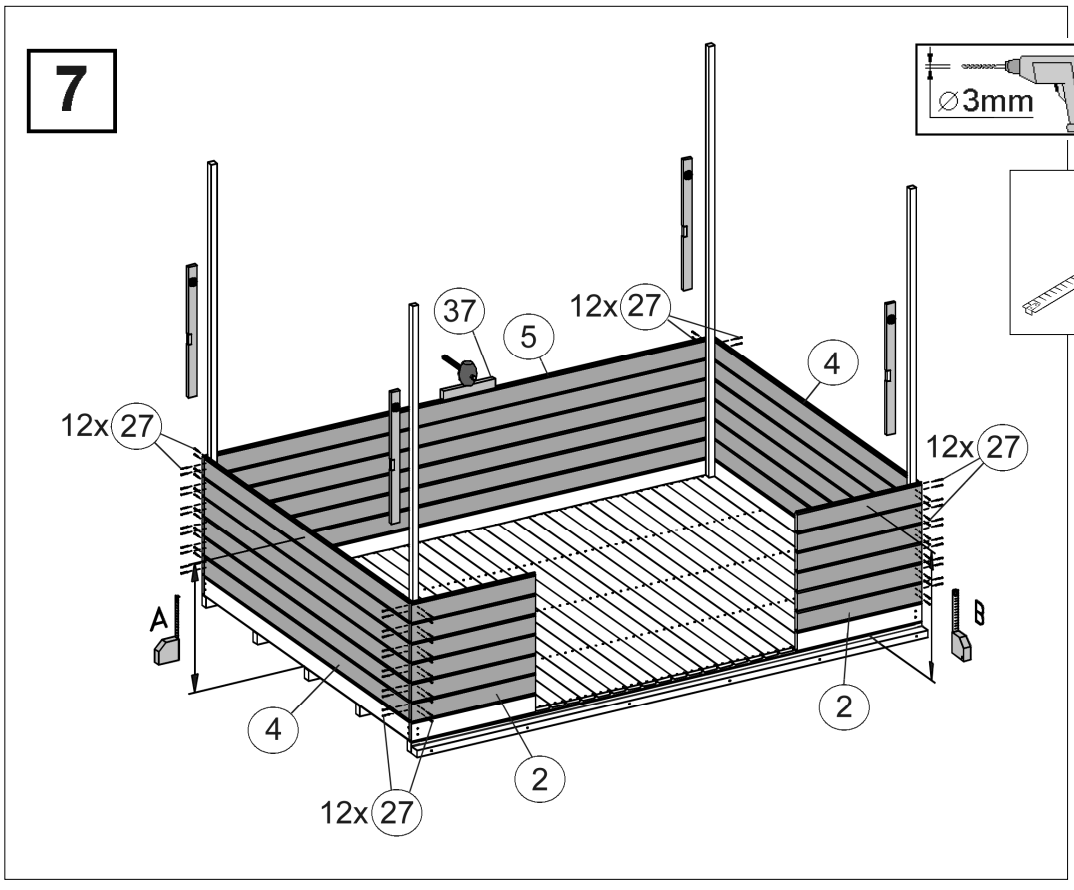

 © Copyright HRB3662

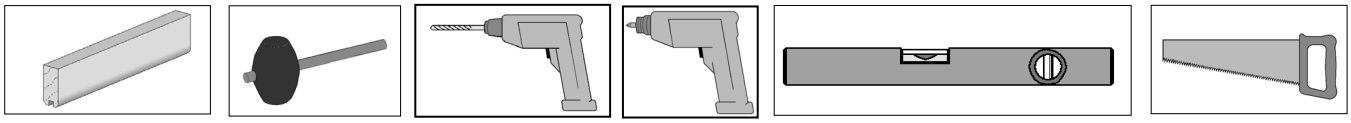

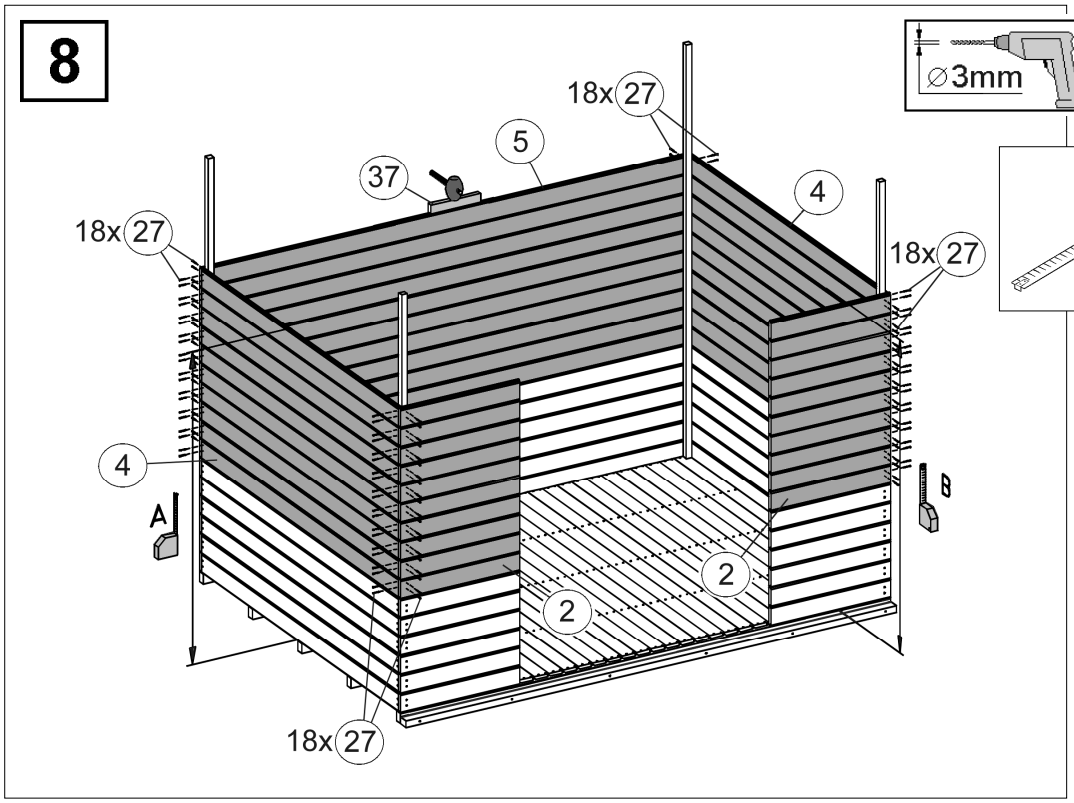

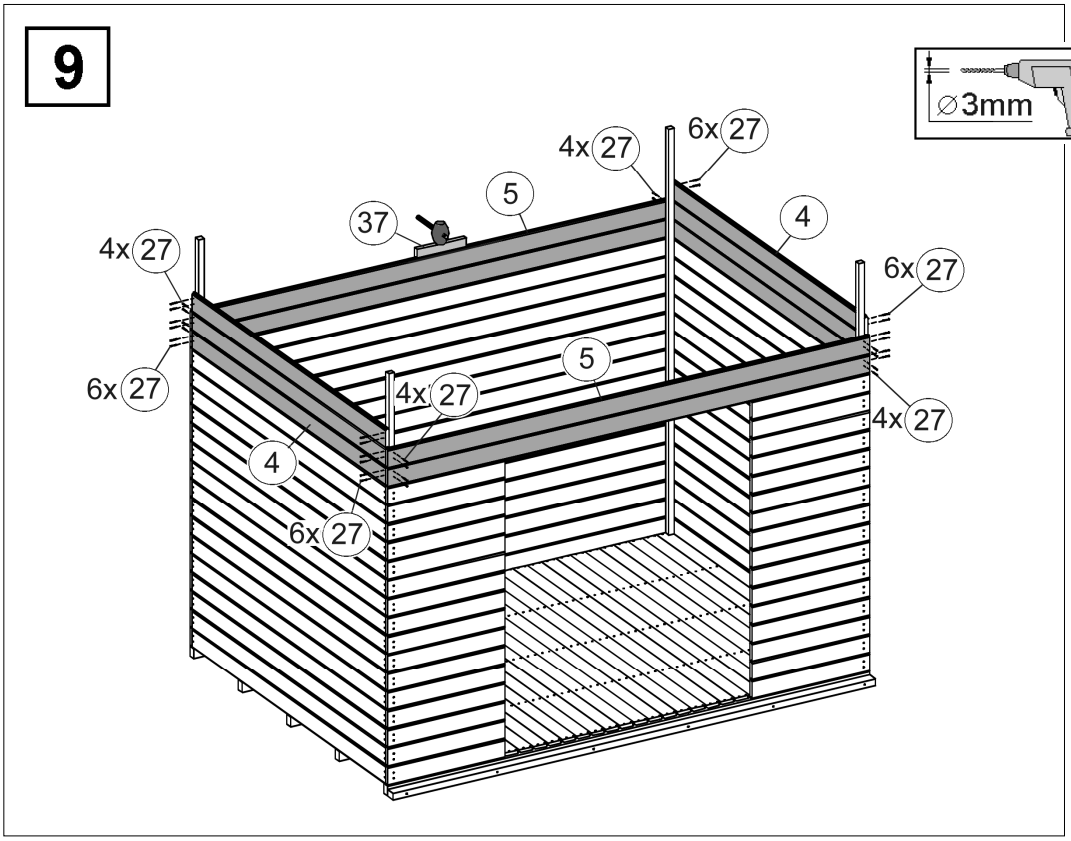

 © Copyright HRB3662

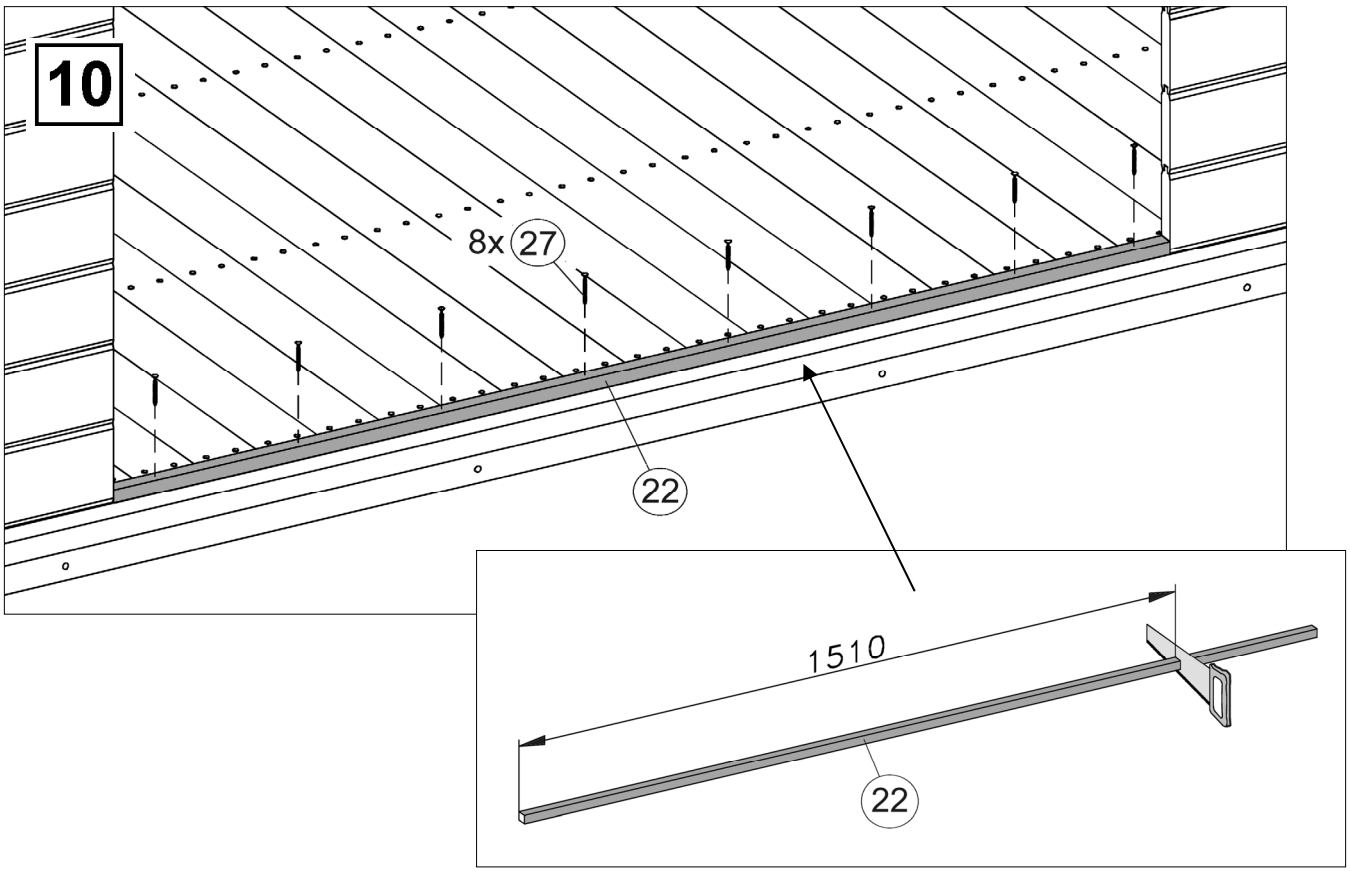

 © Copyright HRB3662

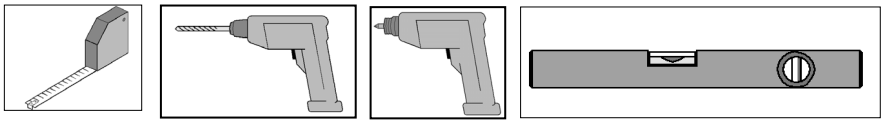



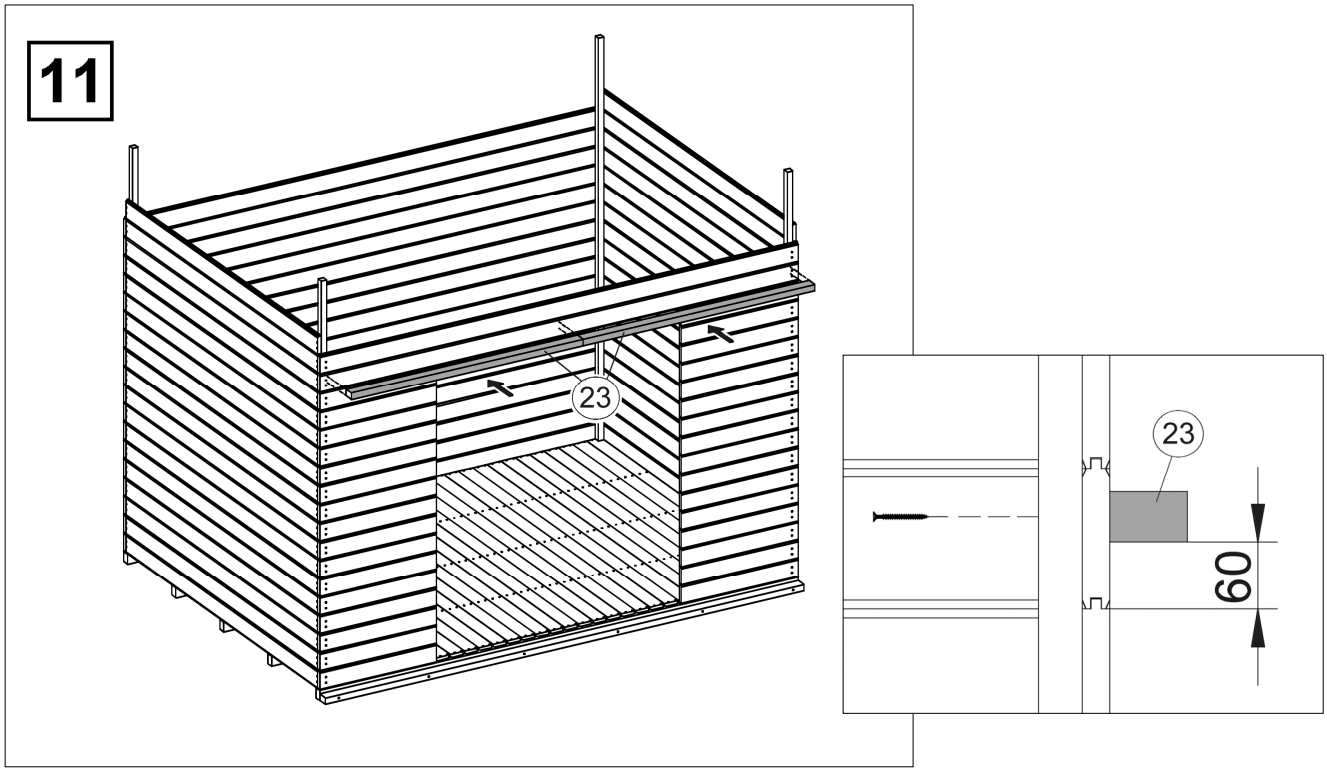

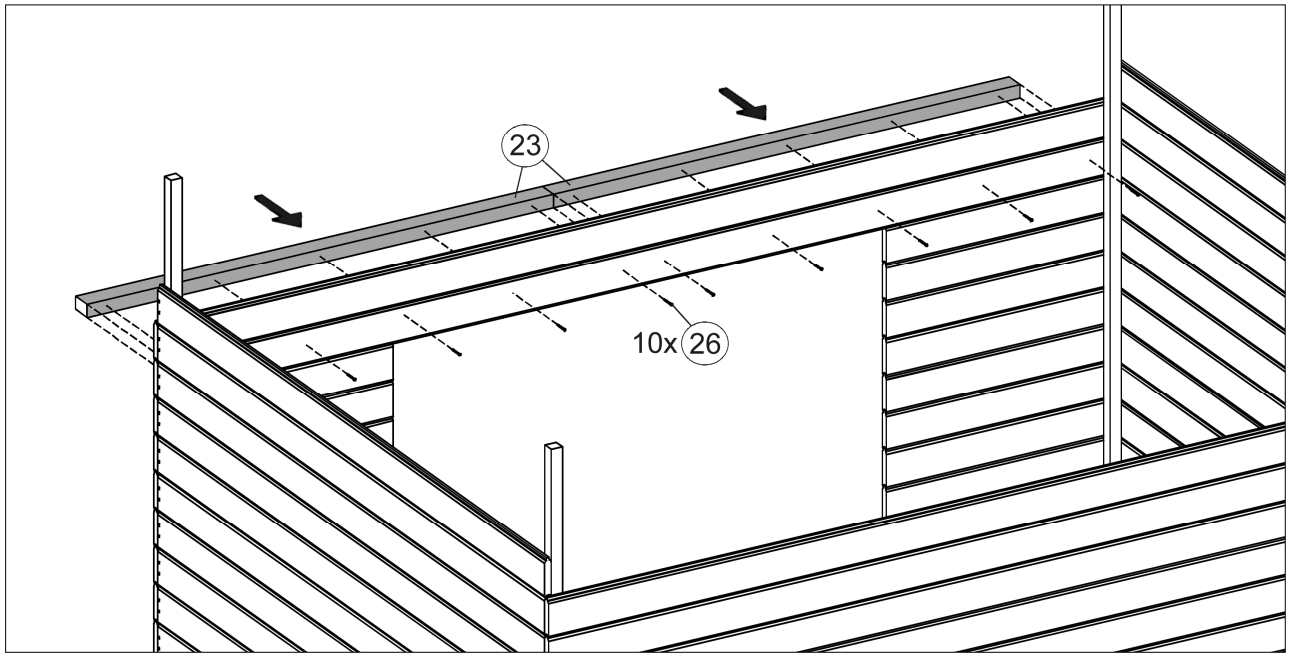

 © Copyright HRB3662

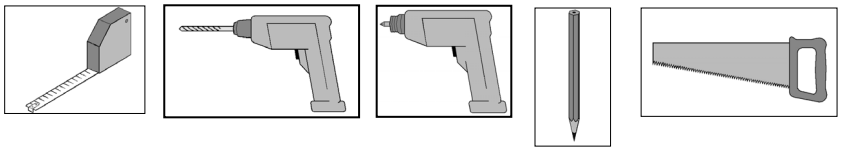

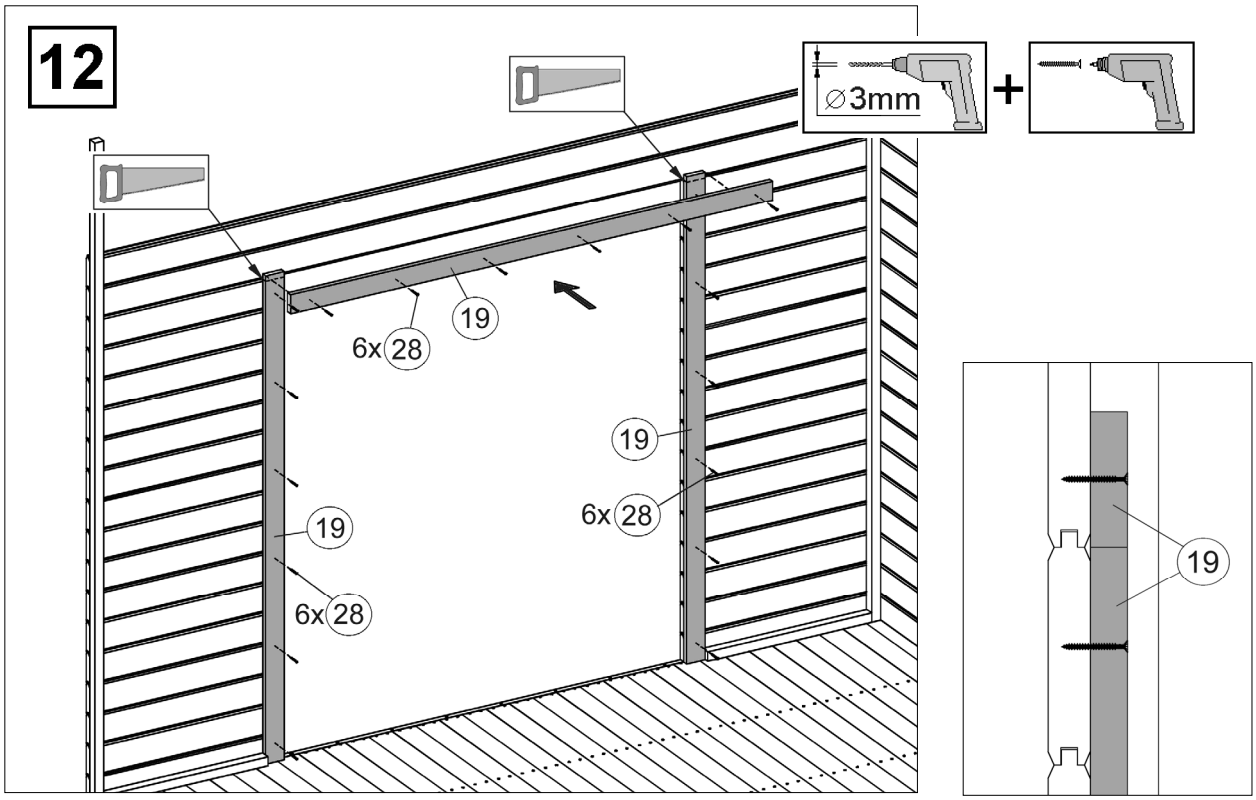

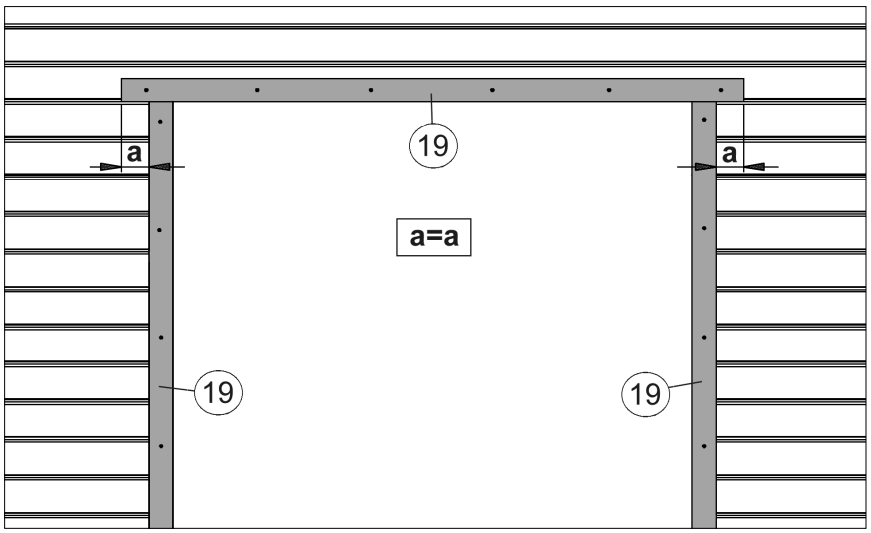

 © Copyright HRB3662

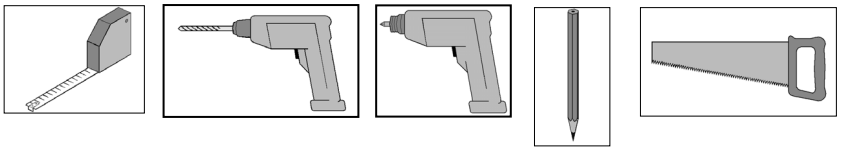

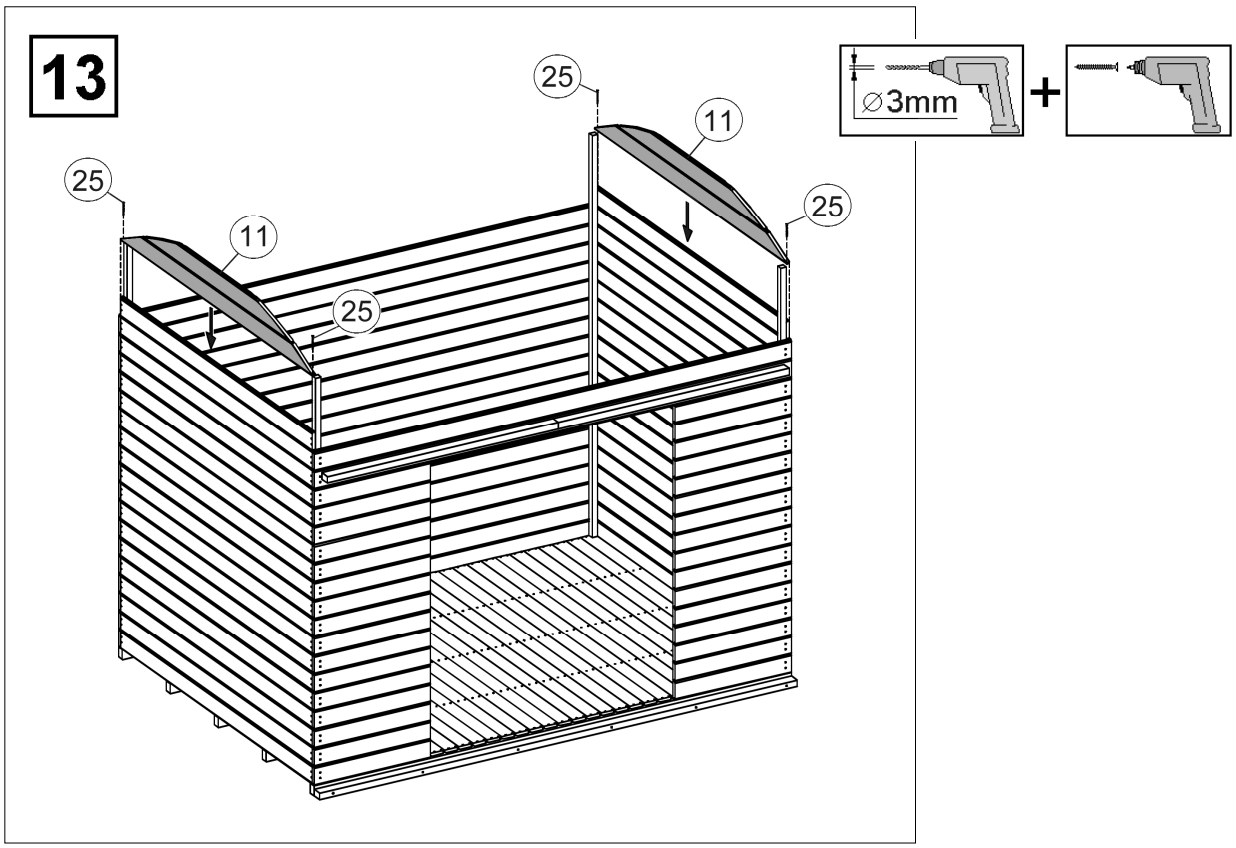

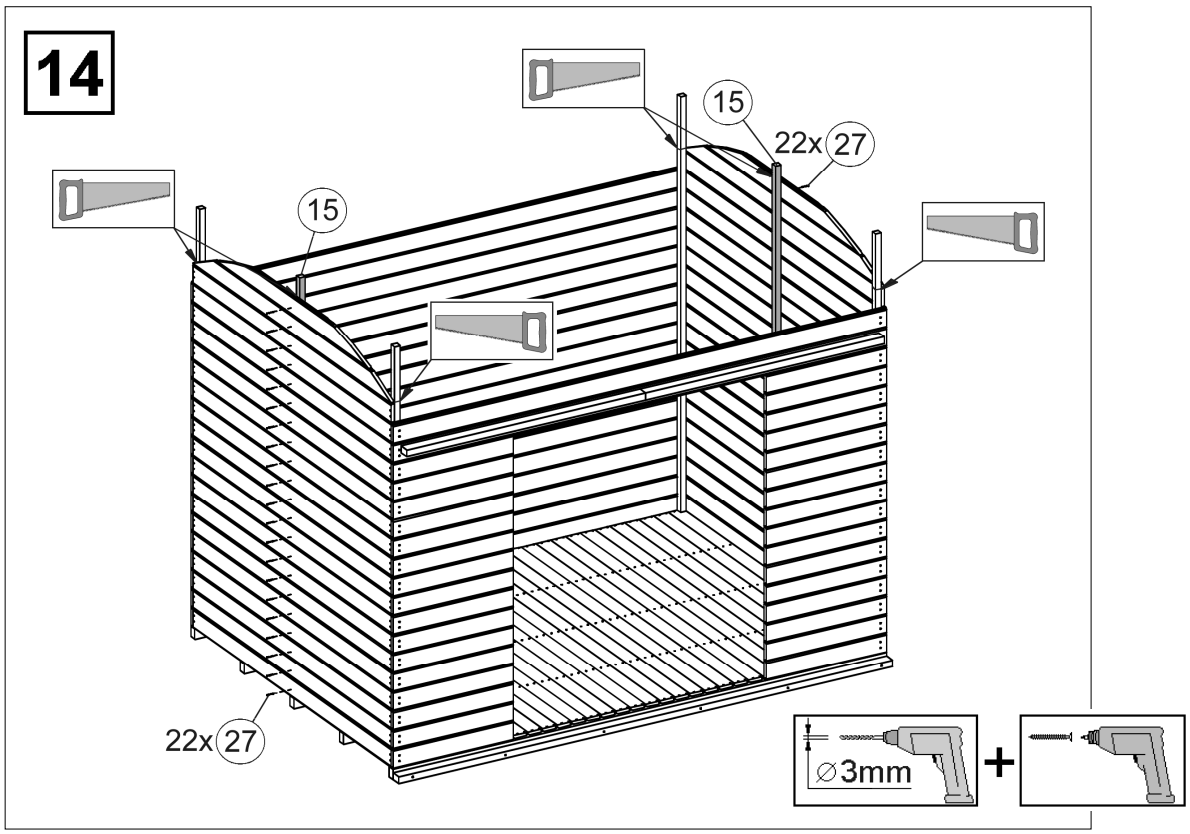

 © Copyright HRB3662

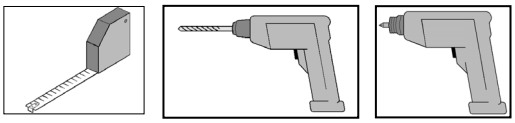

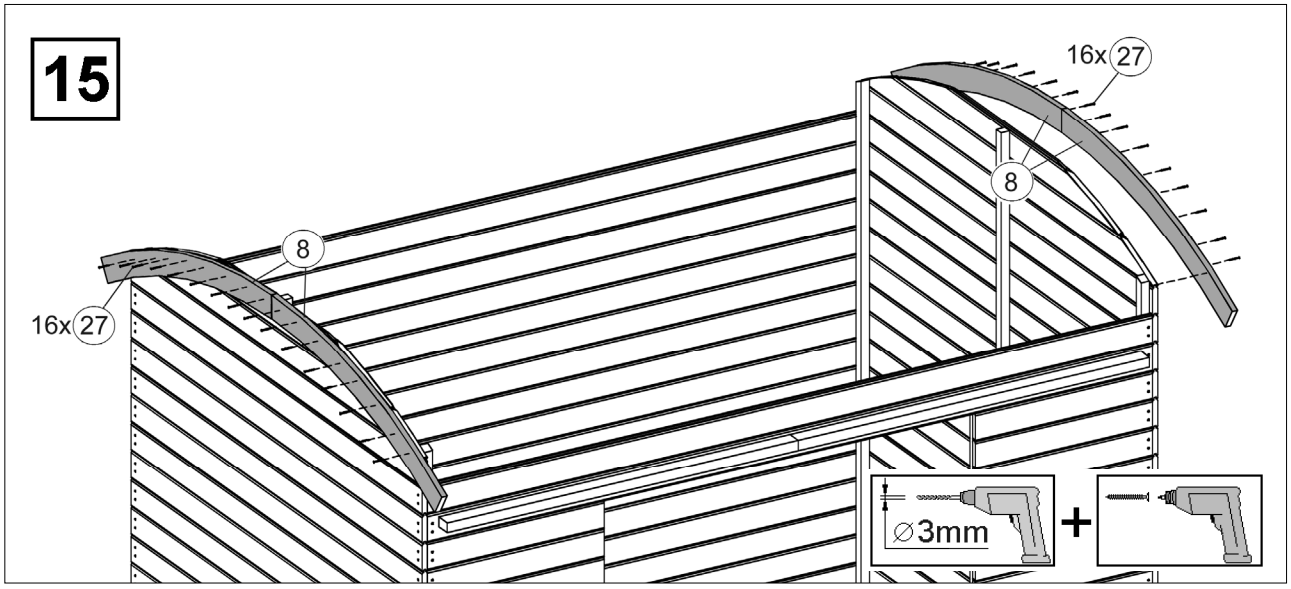

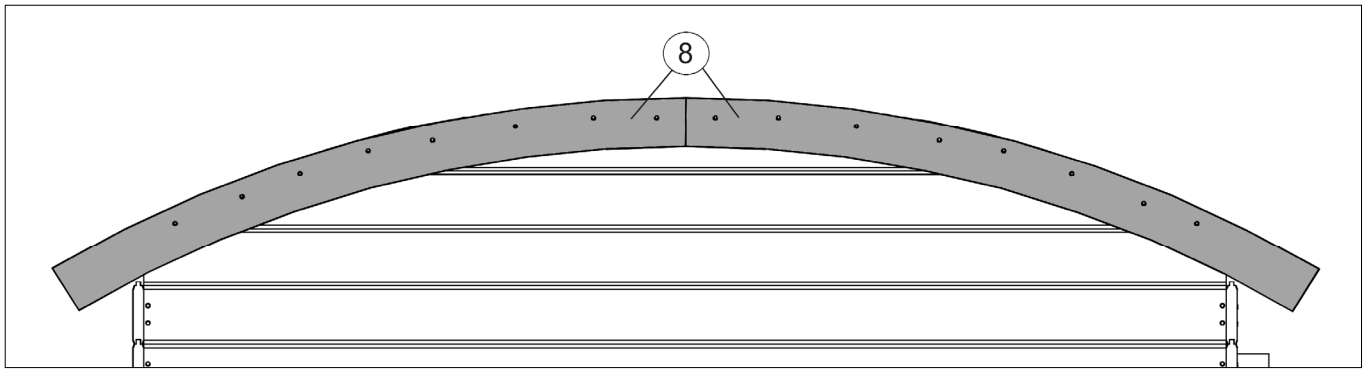

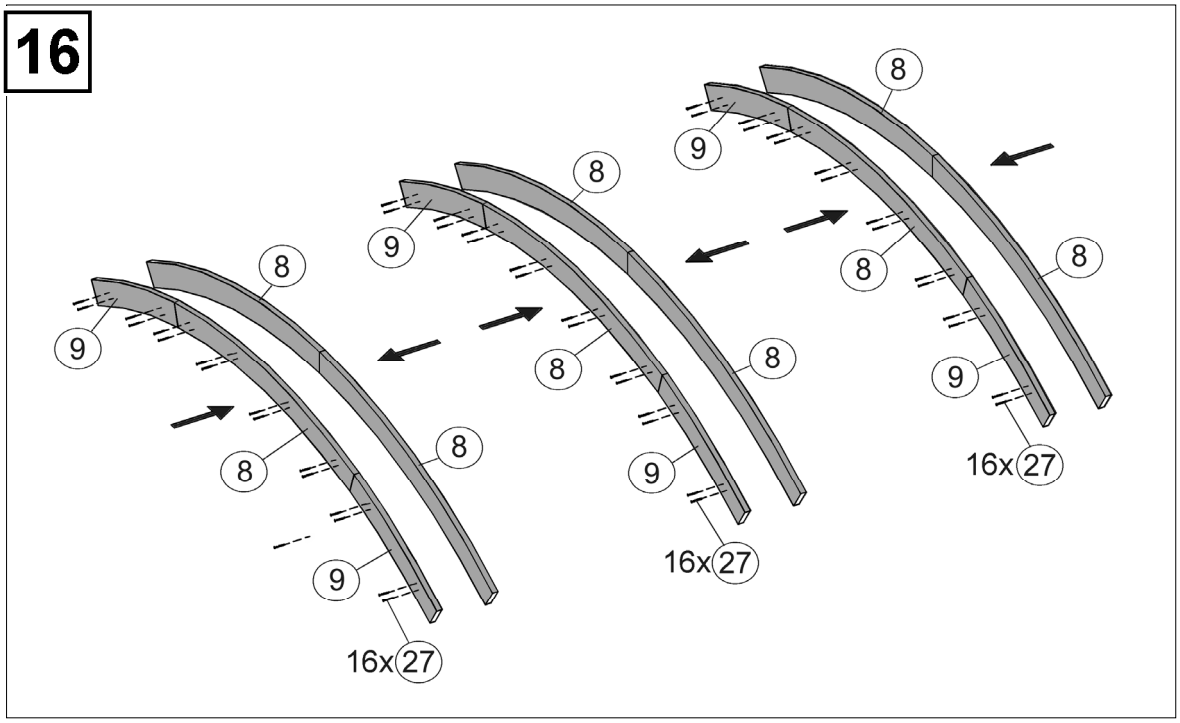

 © Copyright HRB3662

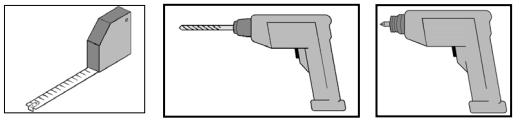

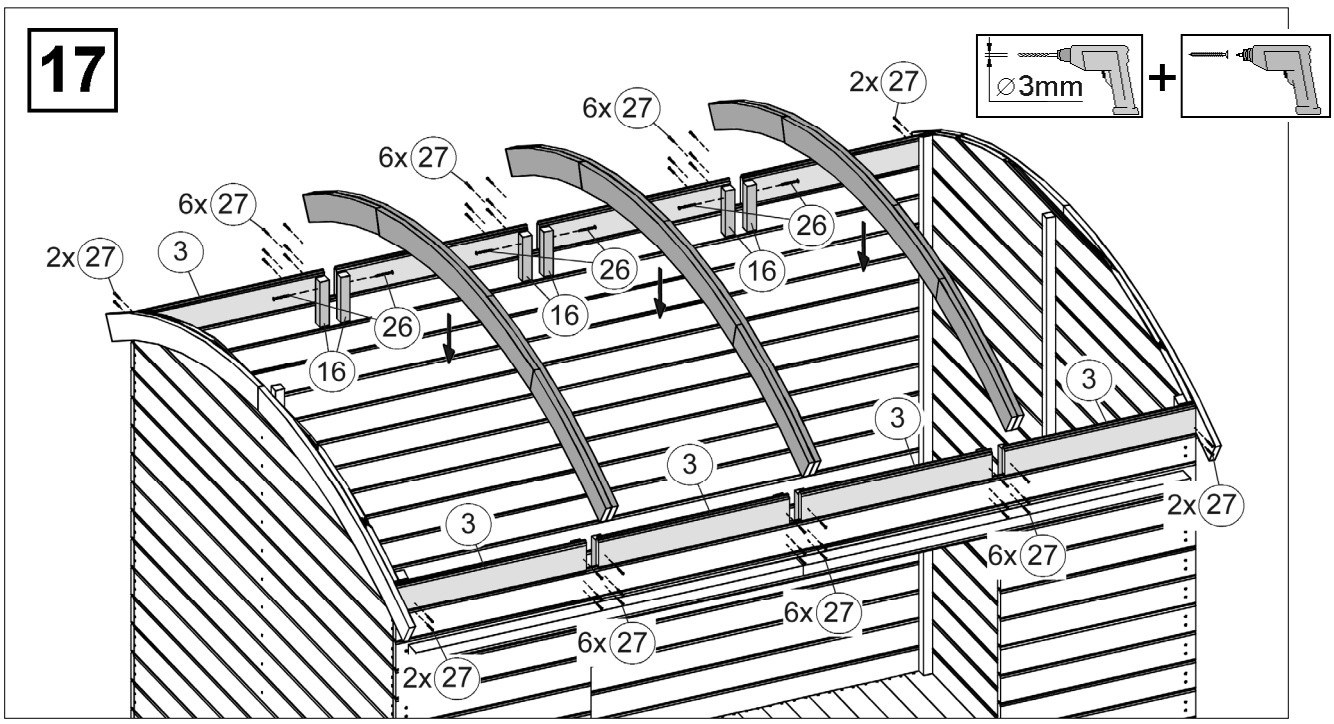

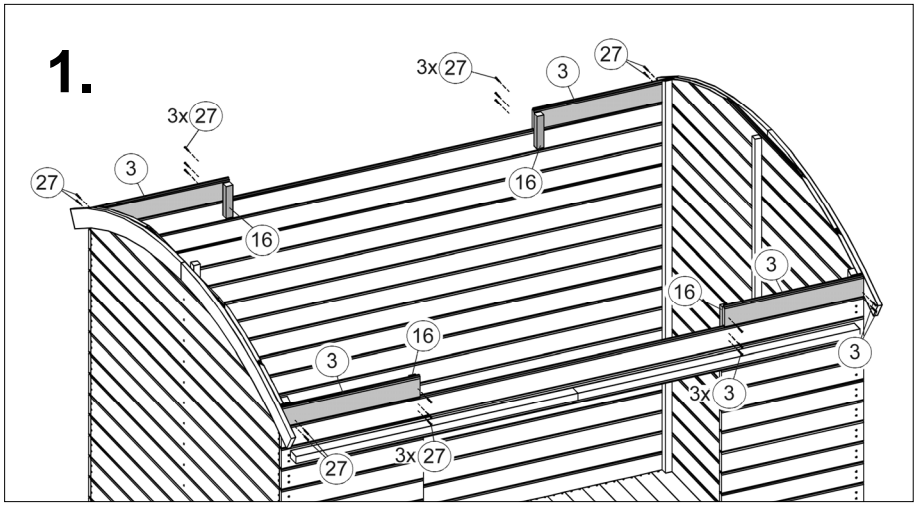

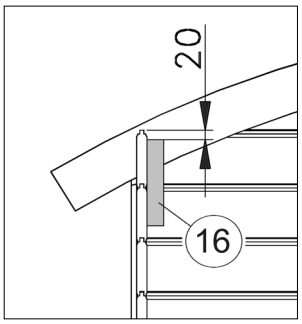

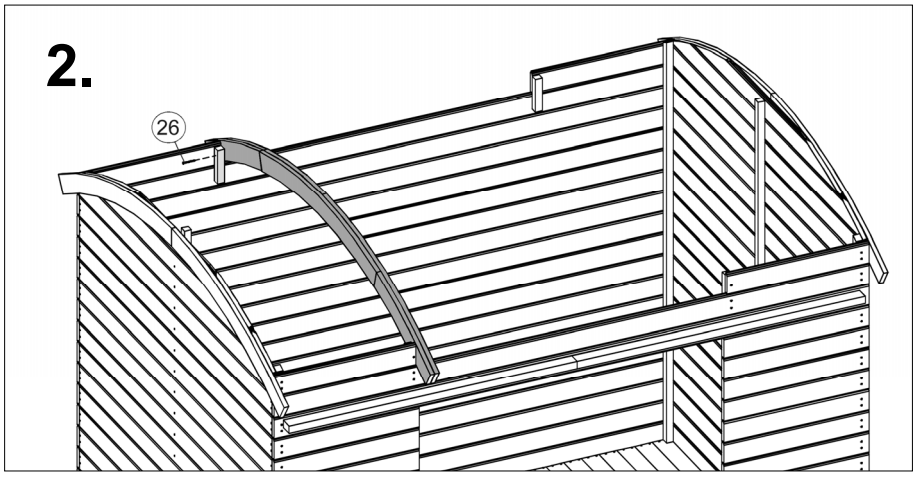

 © Copyright HRB3662

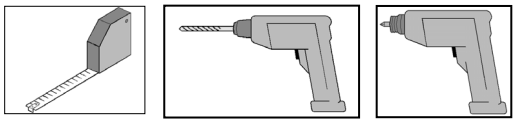

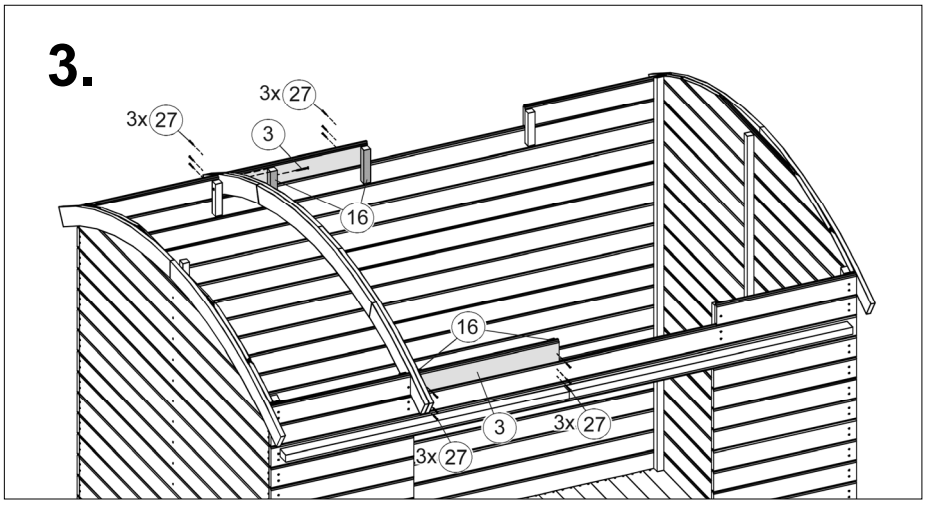

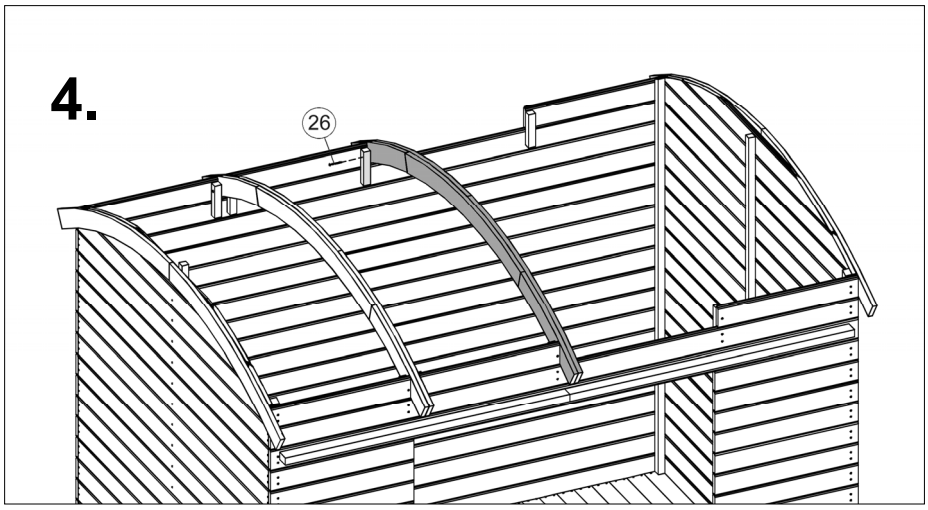

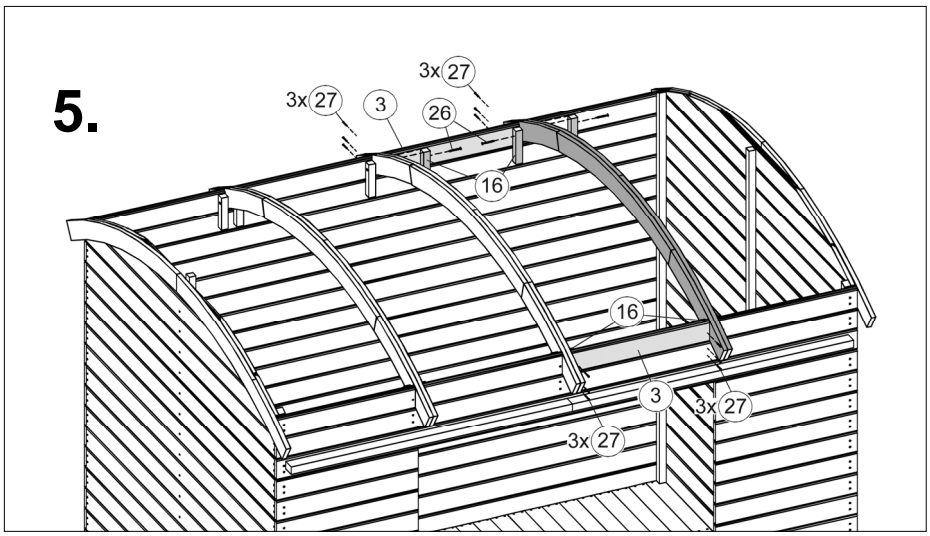

 © Copyright HRB3662

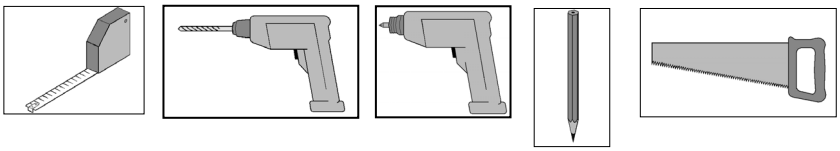

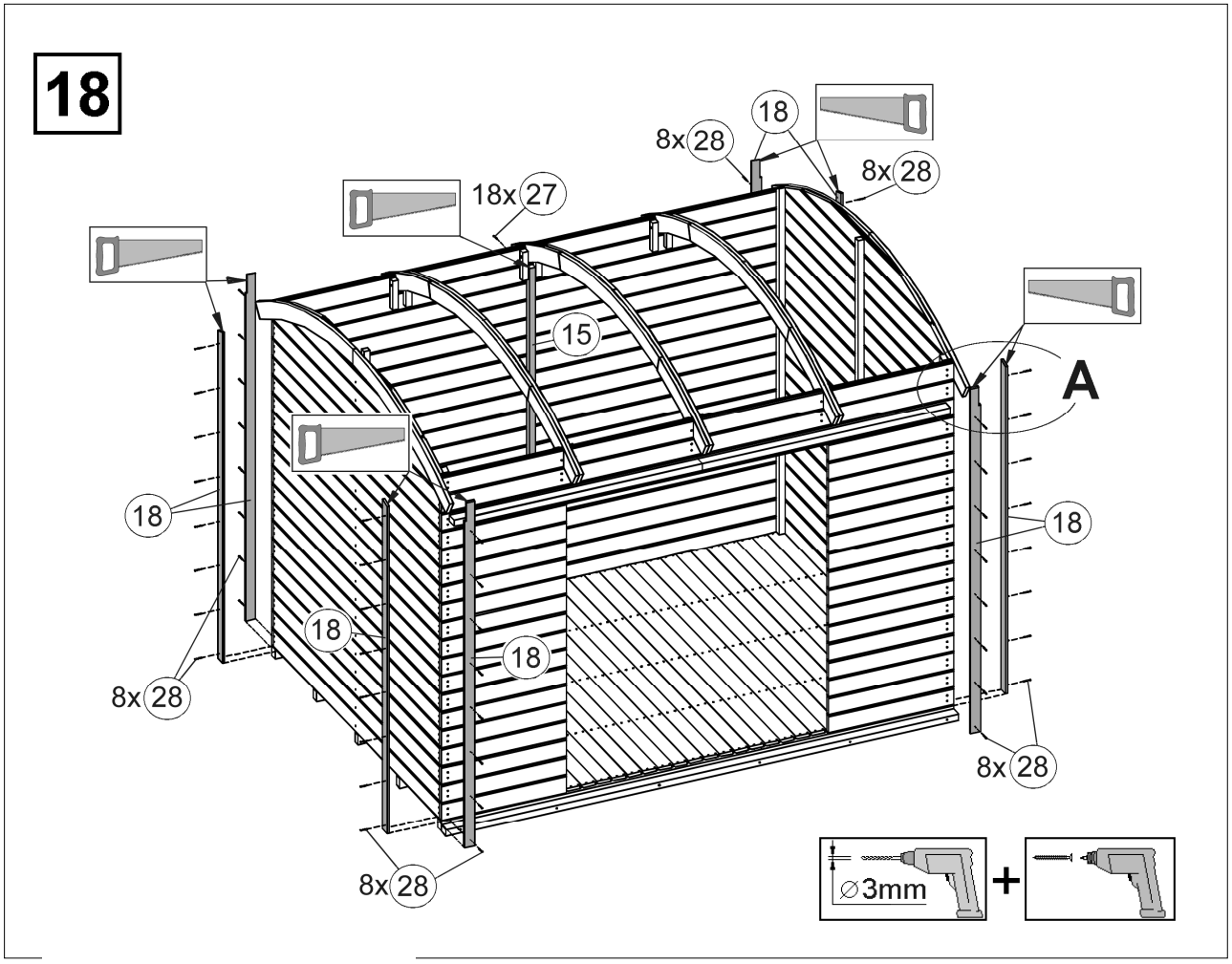

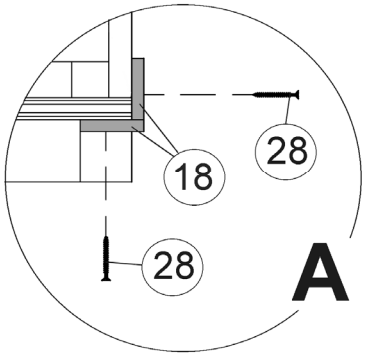

 © Copyright HRB3662

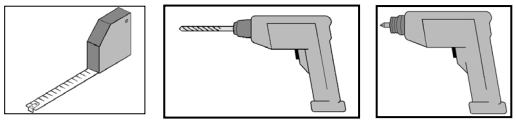

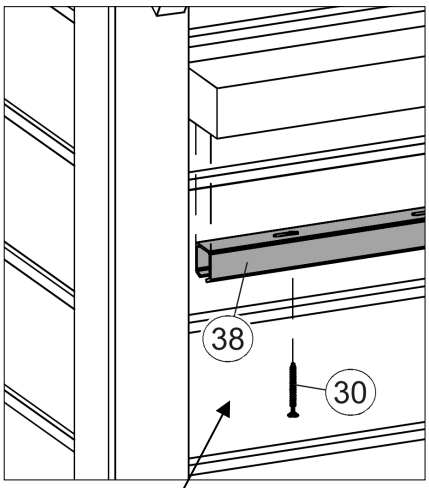

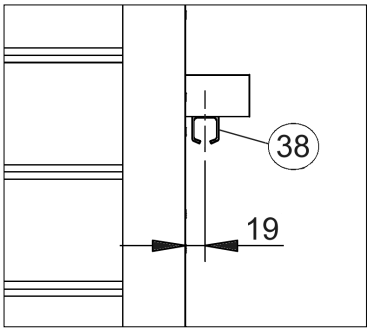

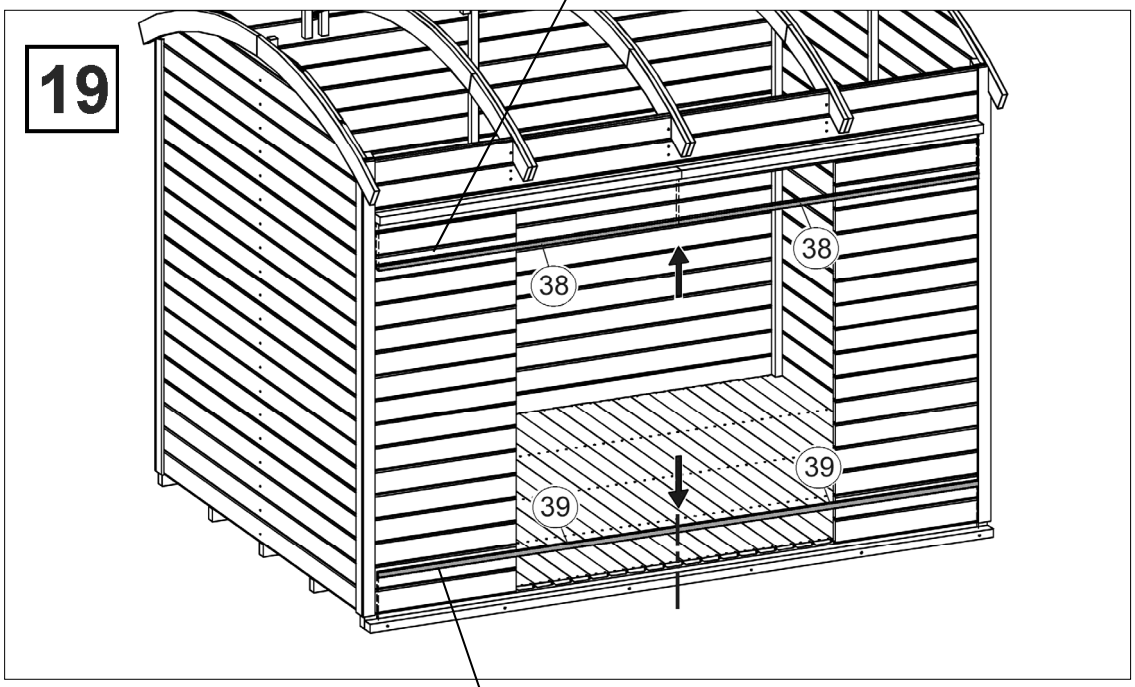

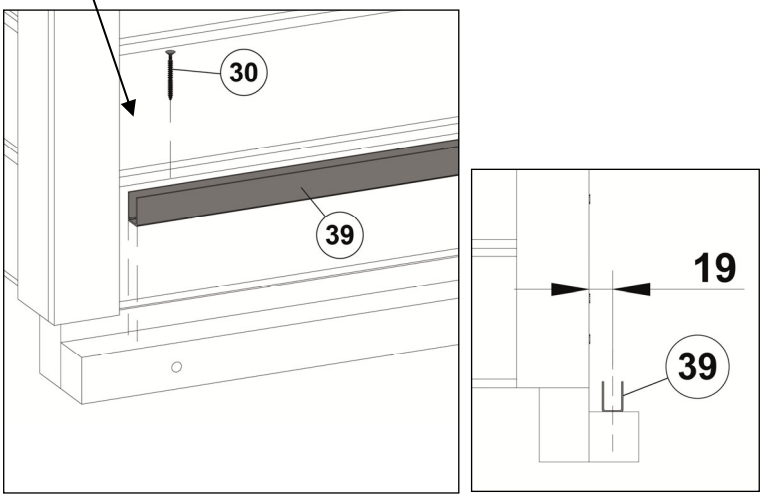

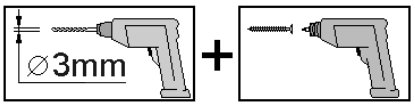

 © Copyright HRB3662

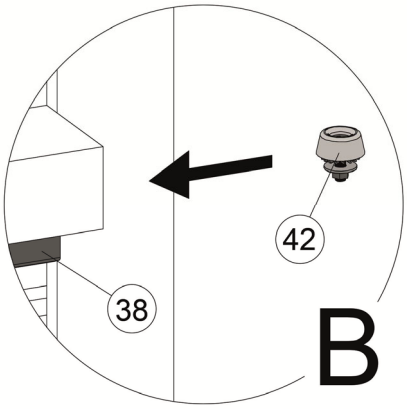

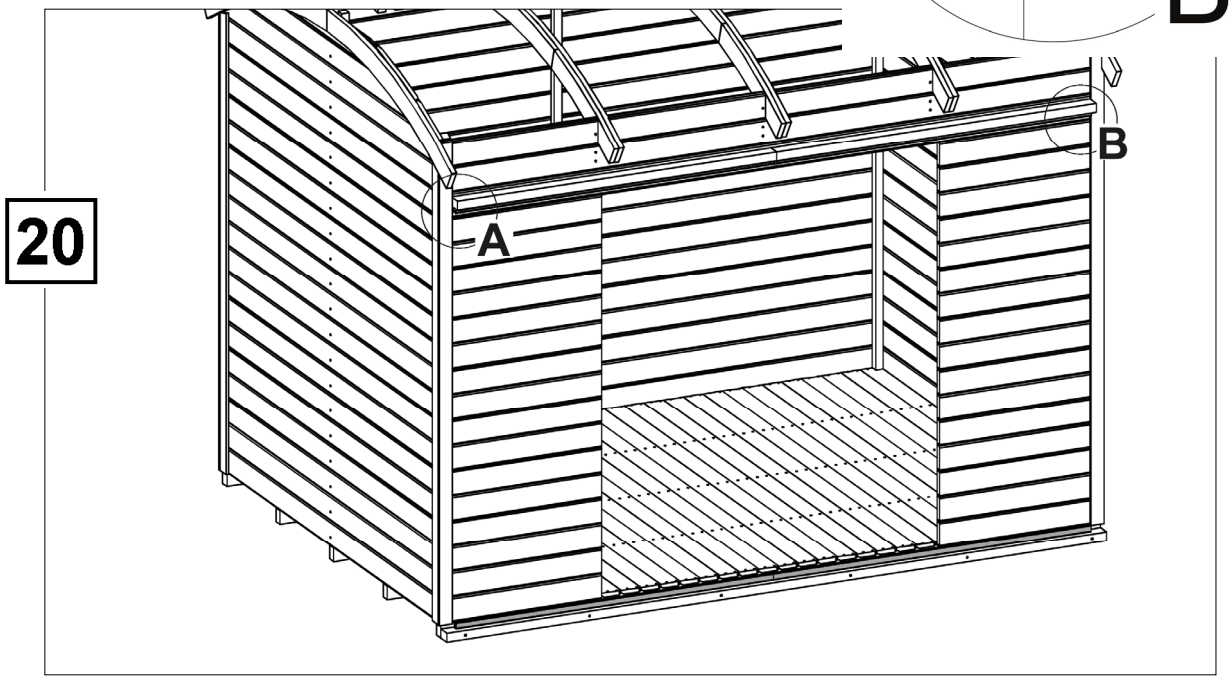

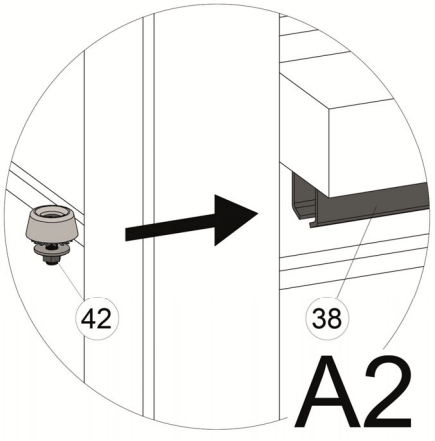

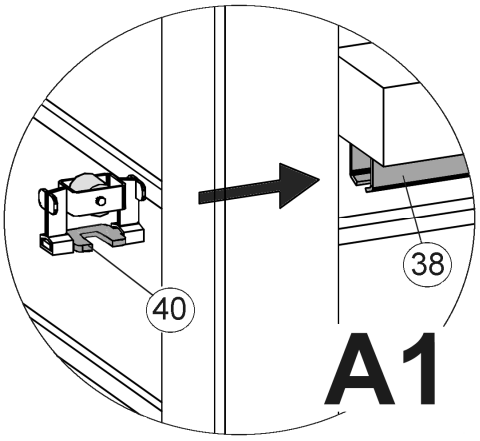

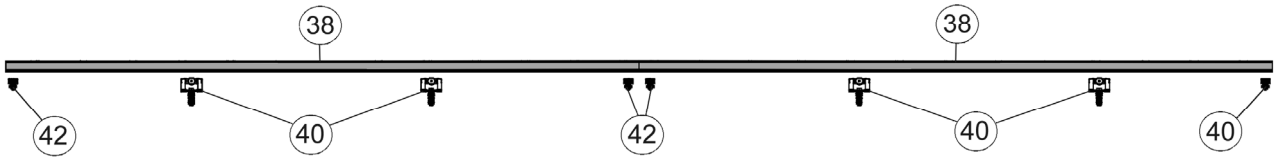

 © Copyright HRB3662

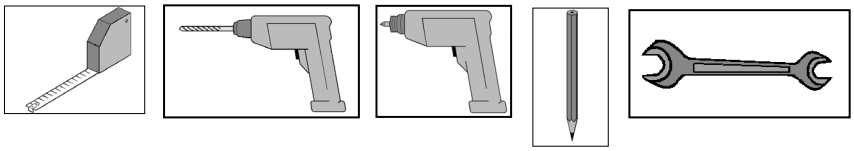

21

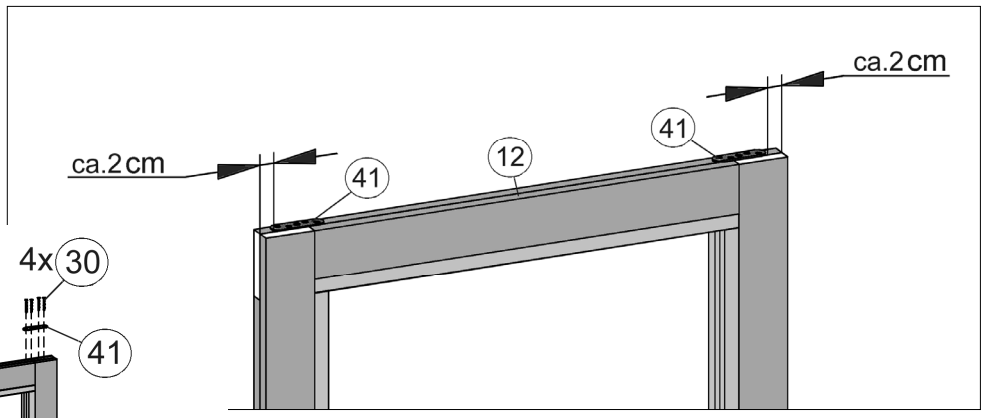

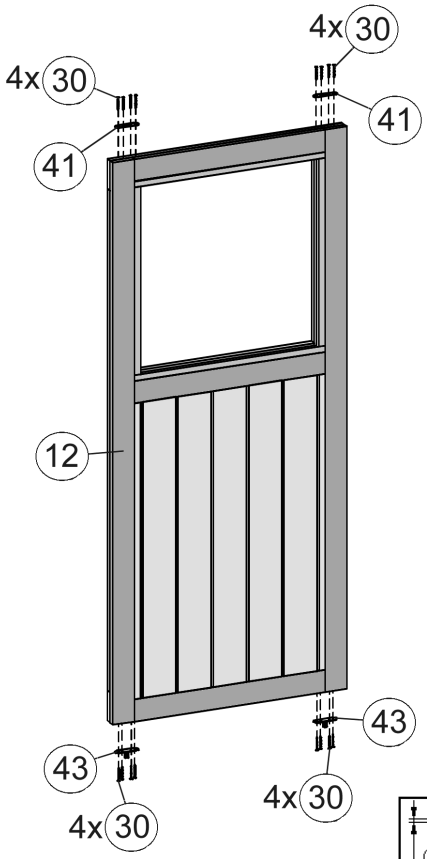

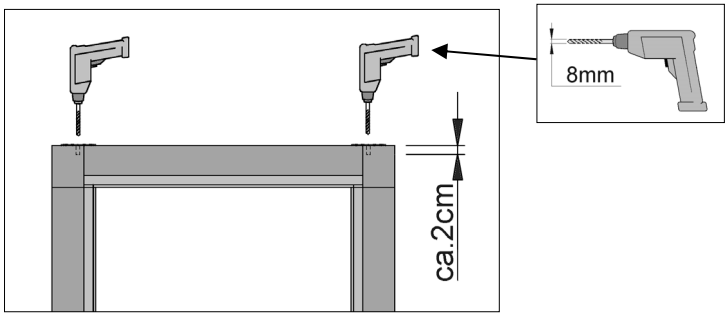

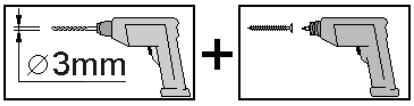

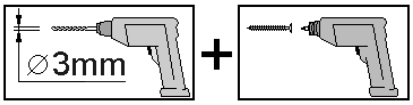

 © Copyright HRB3662

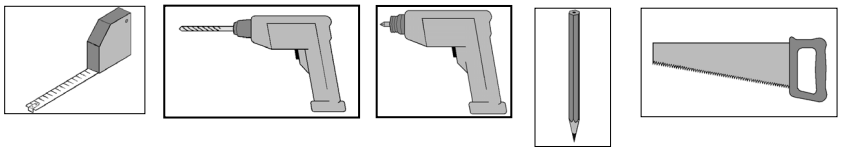

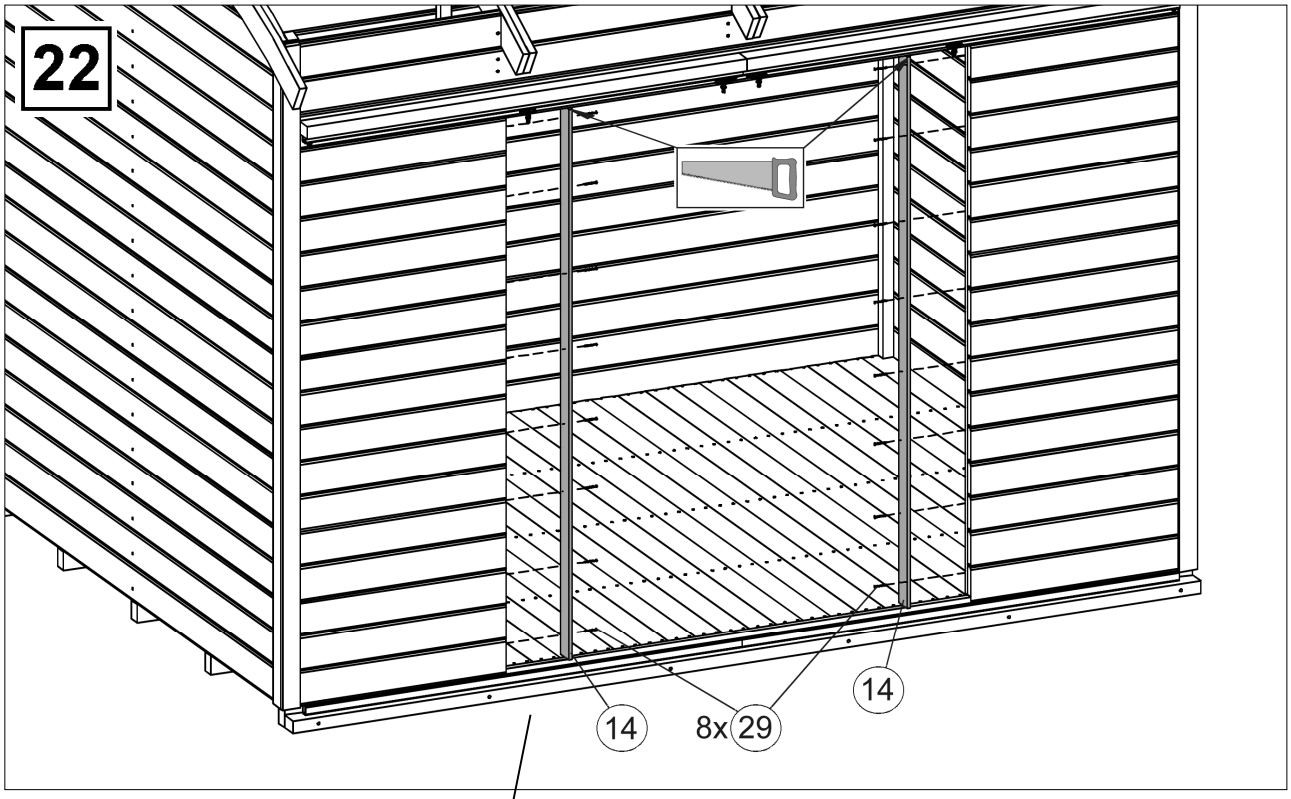

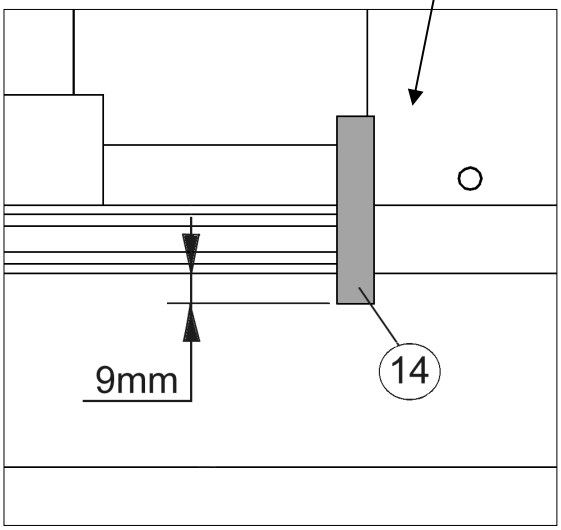

 © Copyright HRB3662

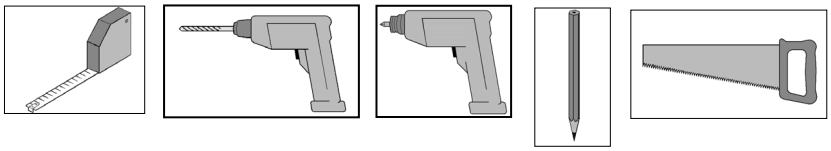

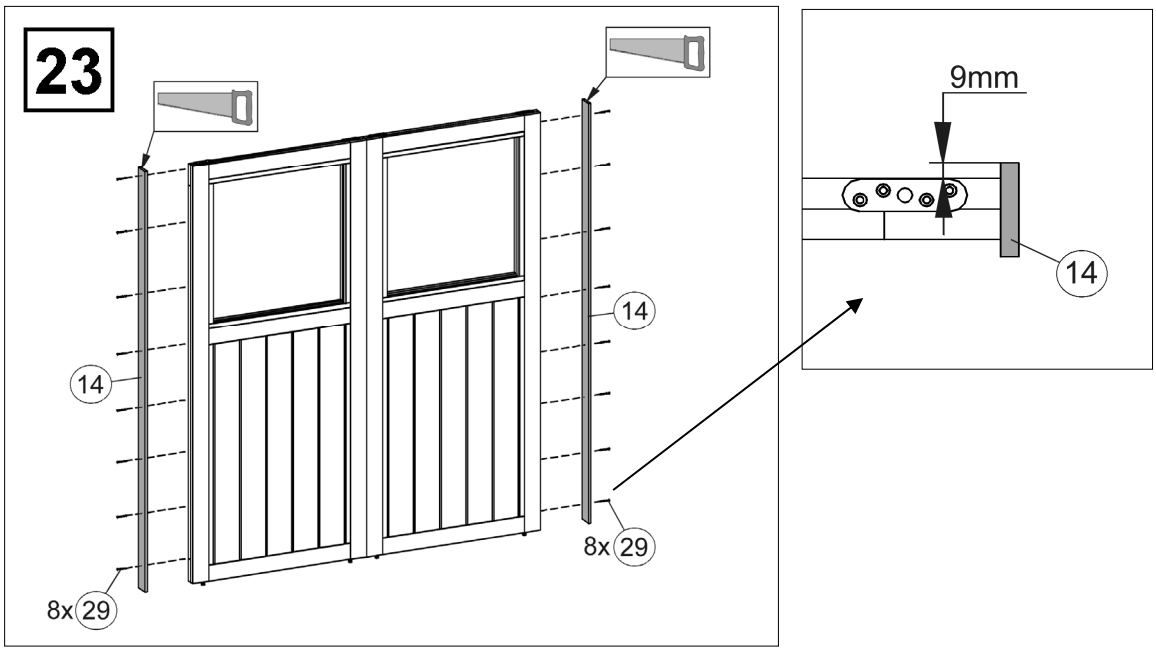

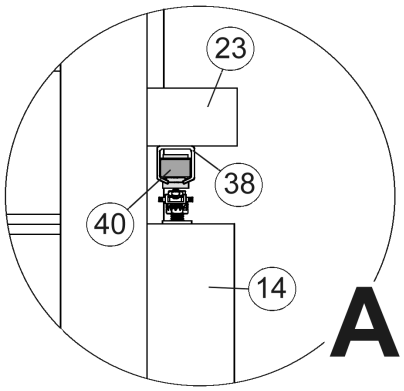

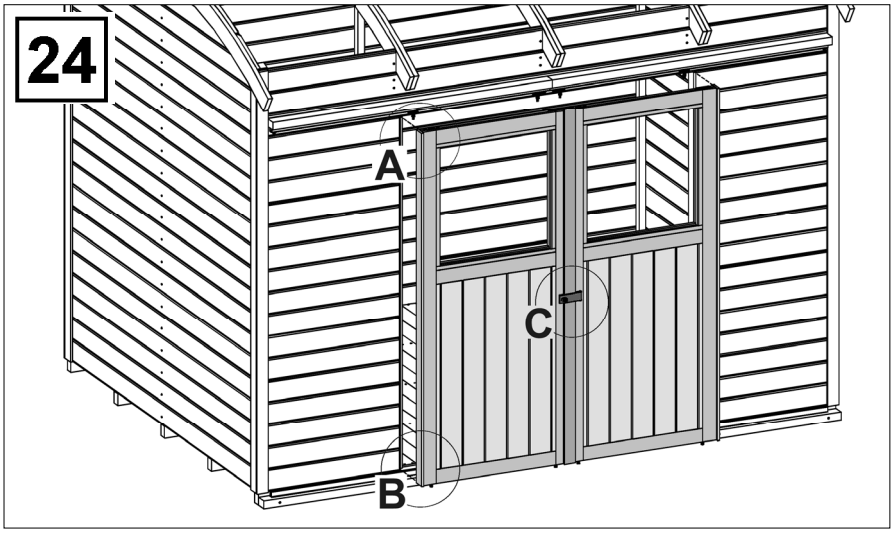

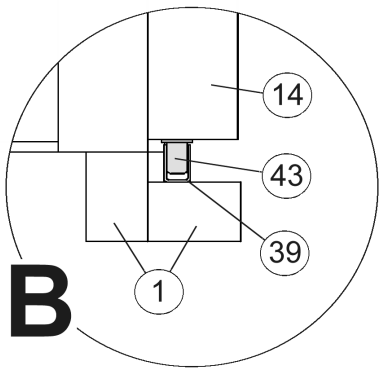

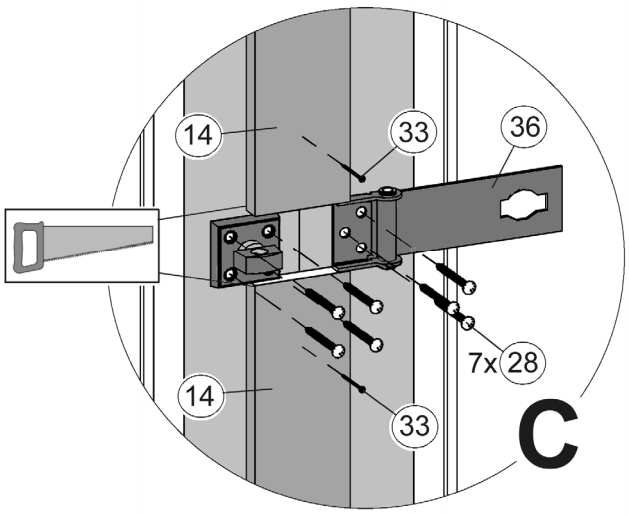

 © Copyright HRB3662

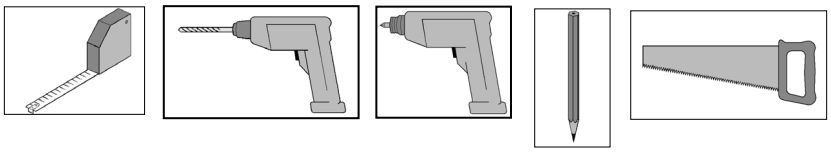

25

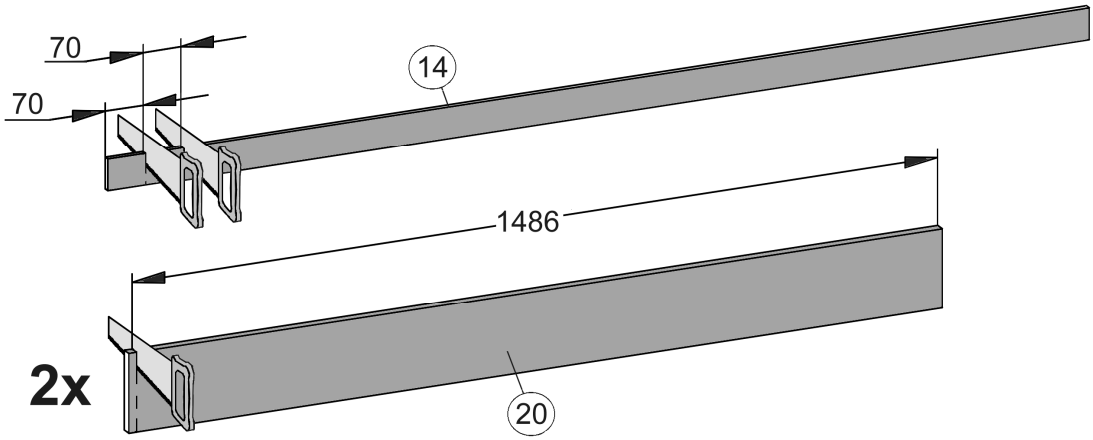

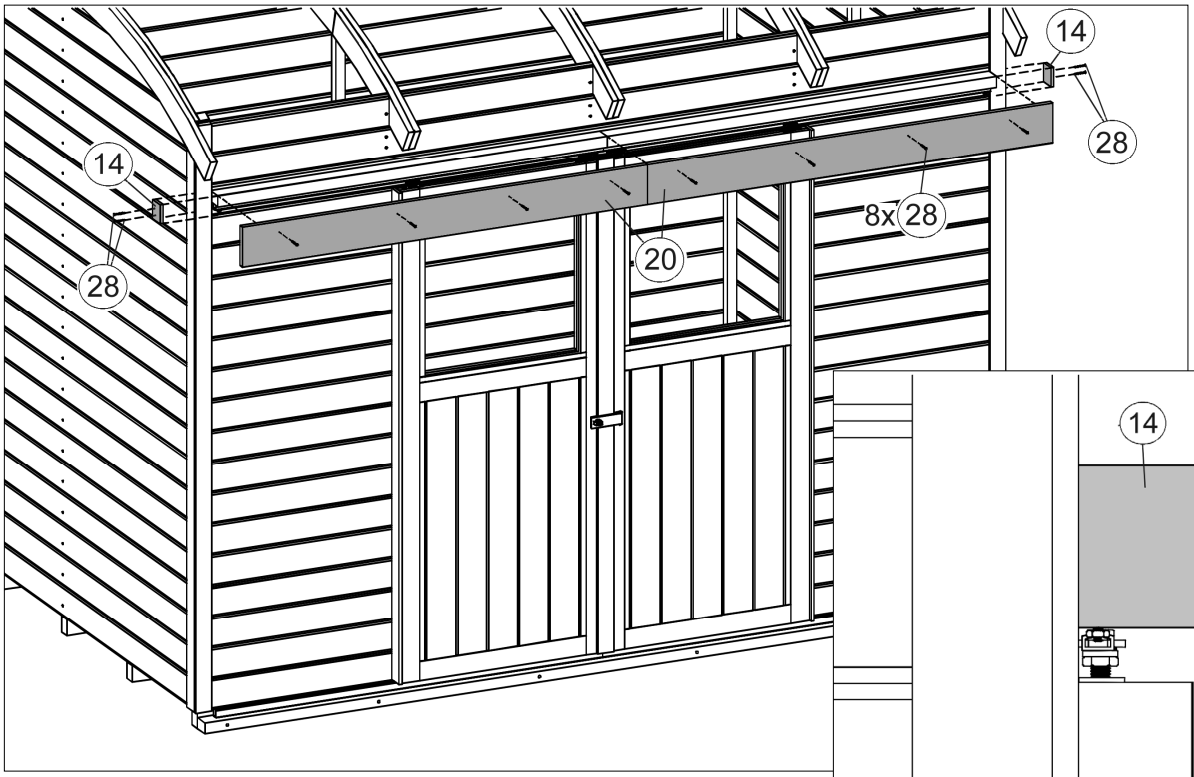

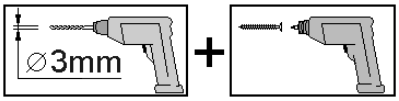

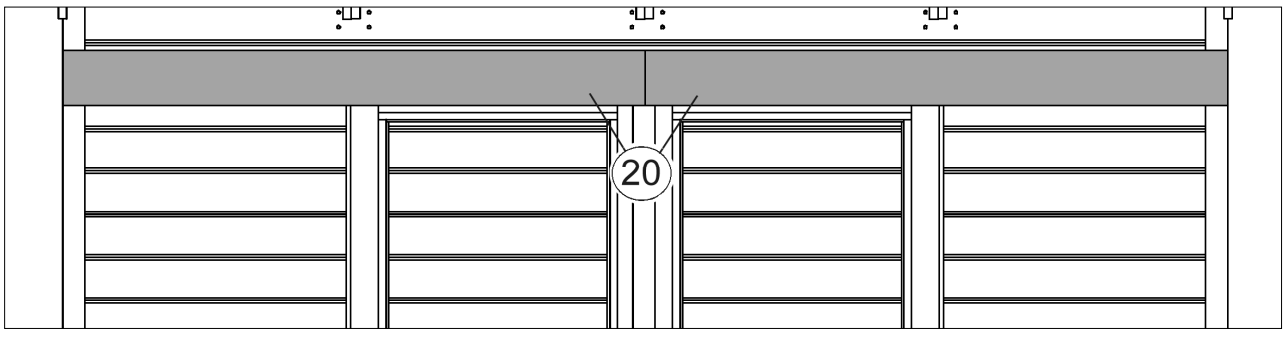

 © Copyright HRB3662

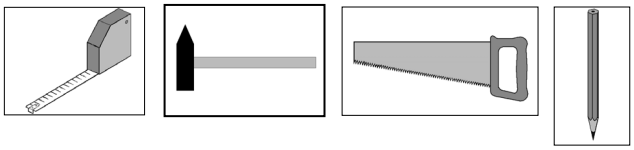

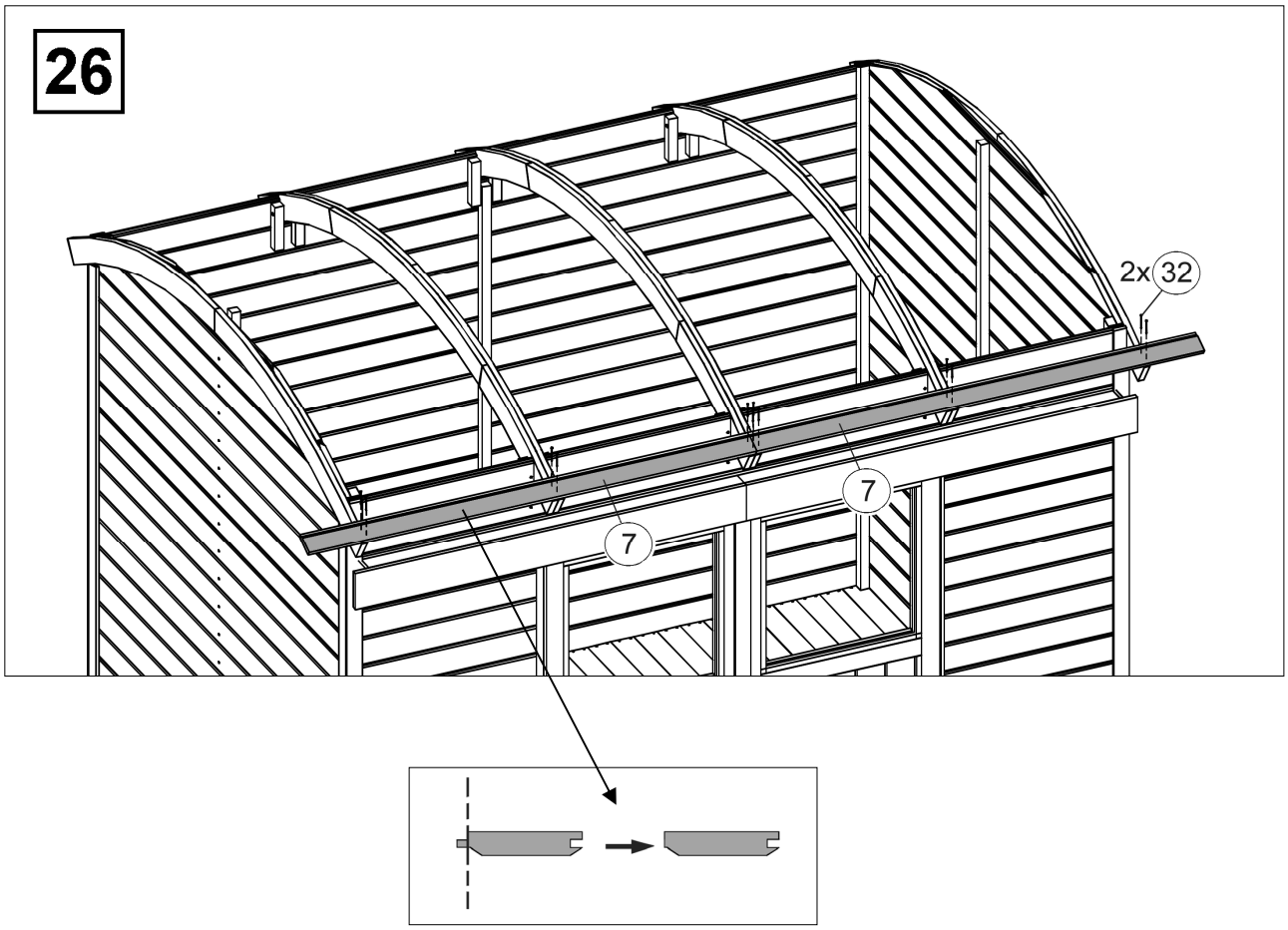

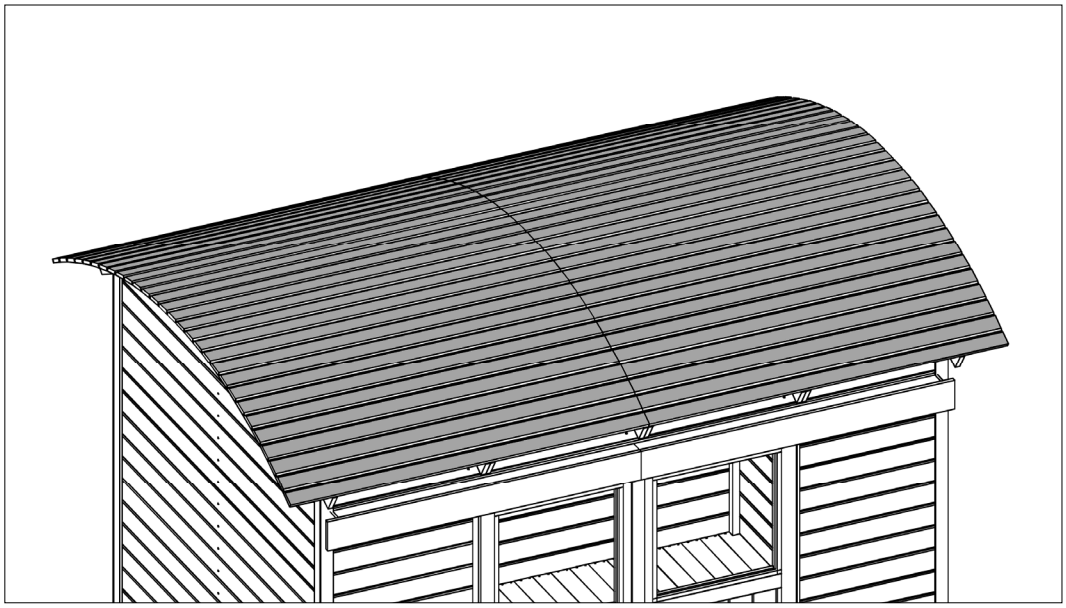

 © Copyright HRB3662

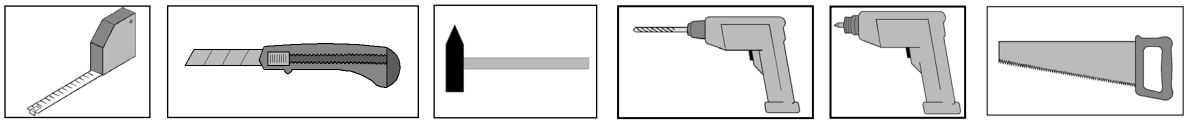

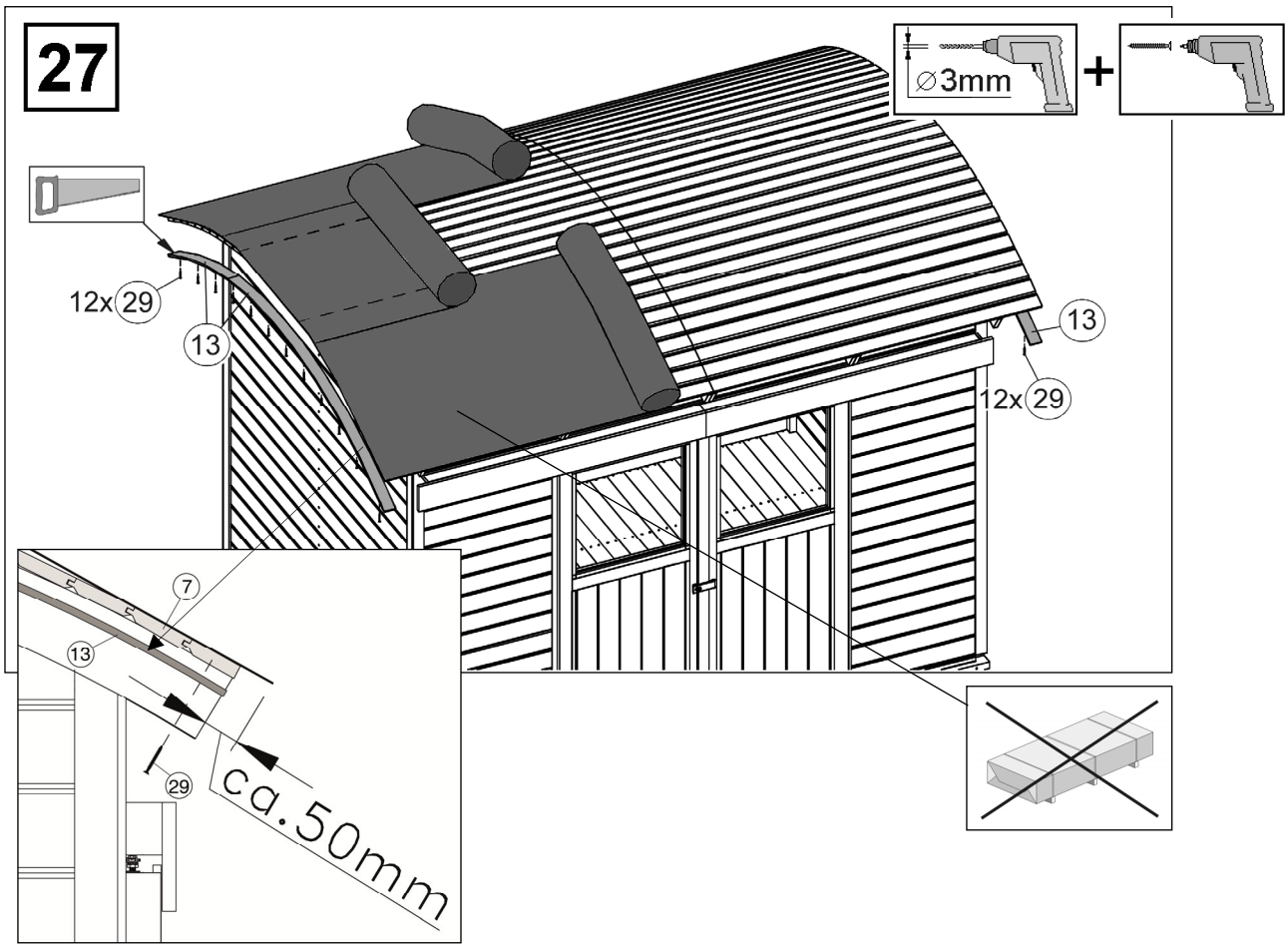

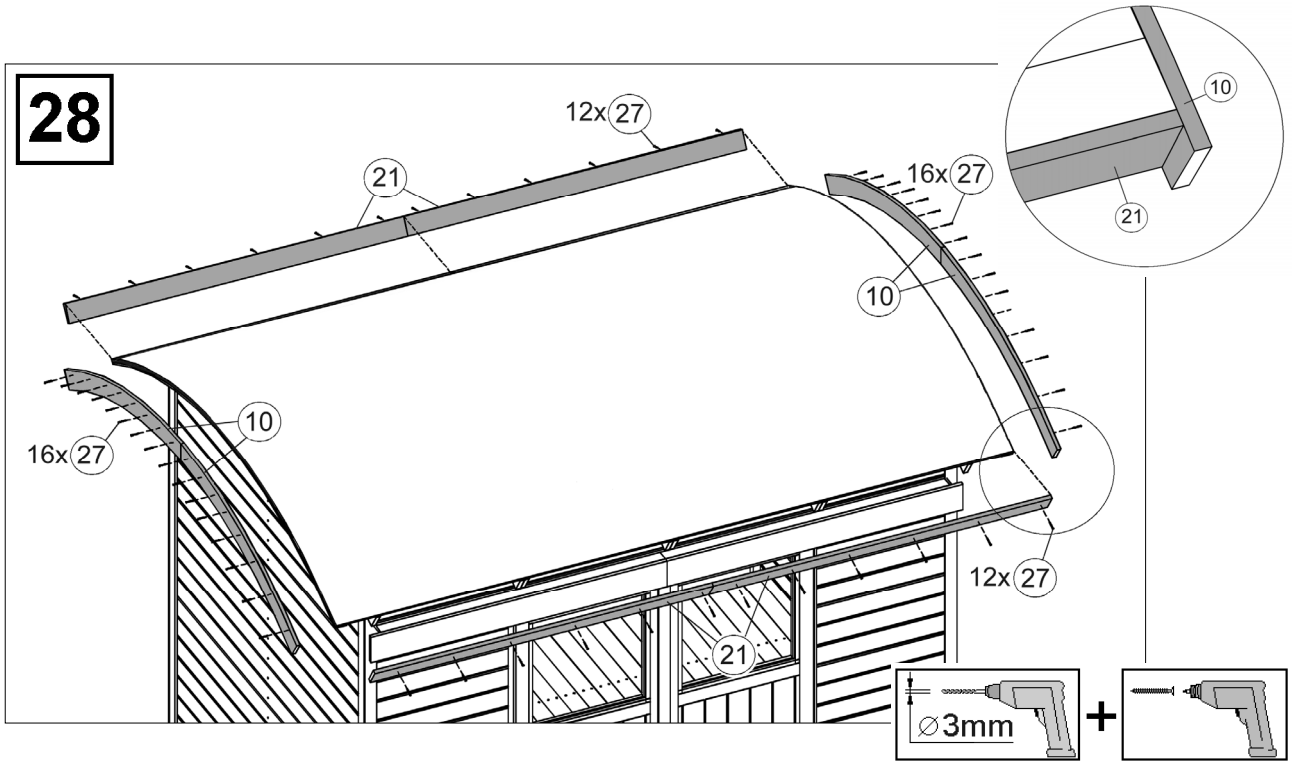

 © Copyright HRB3662

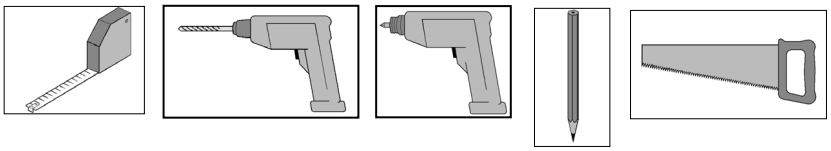

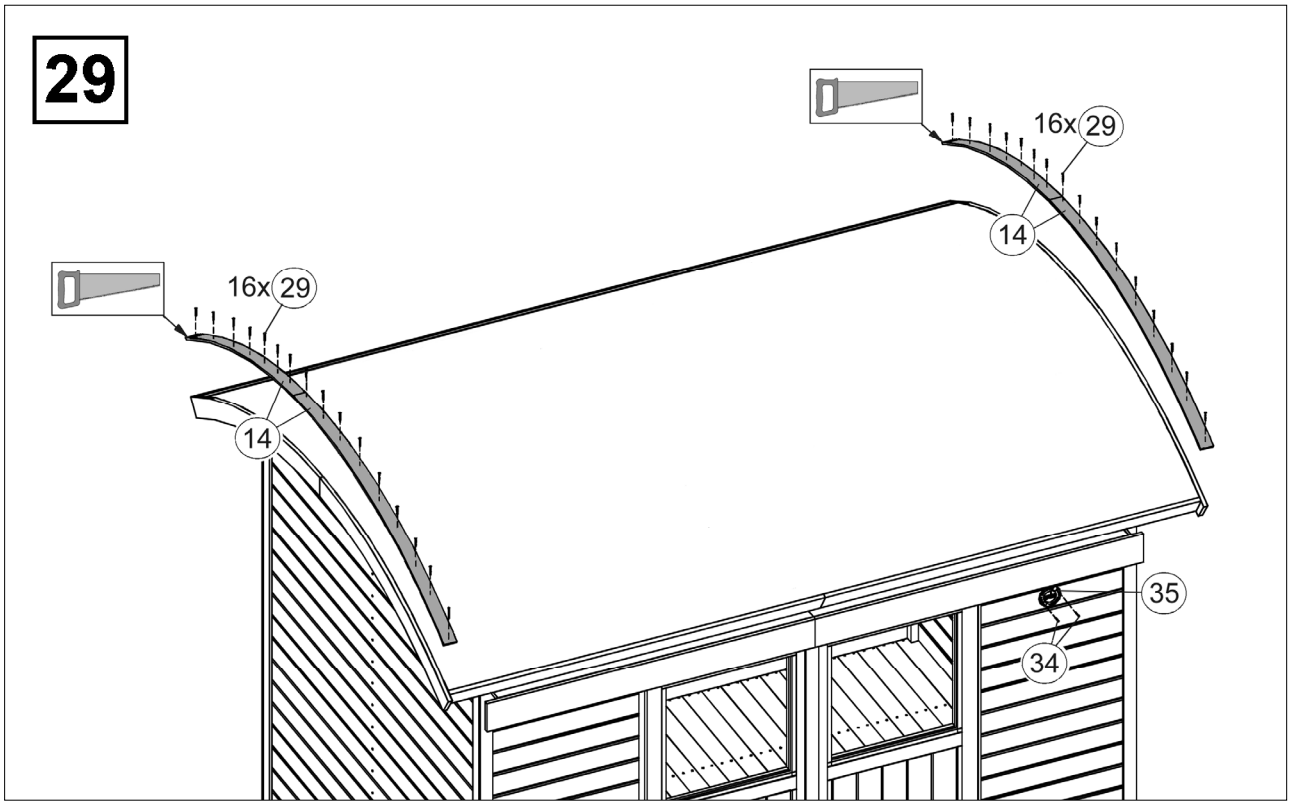

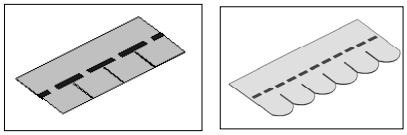

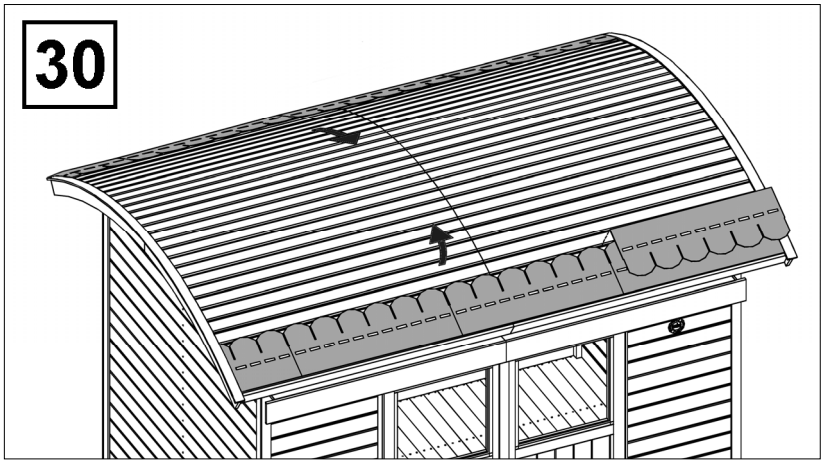

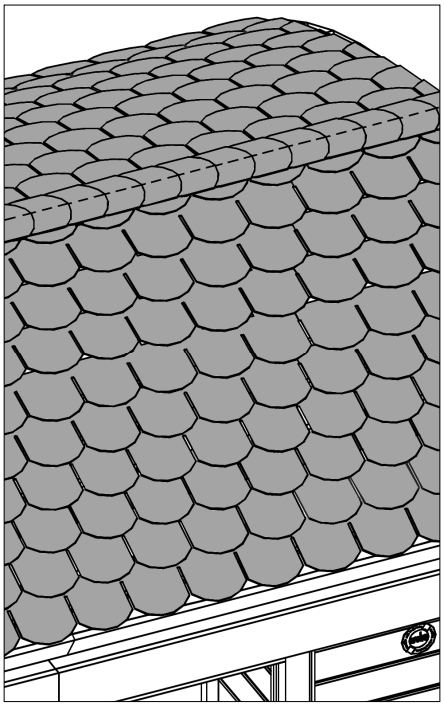

 © Copyright HRB3662

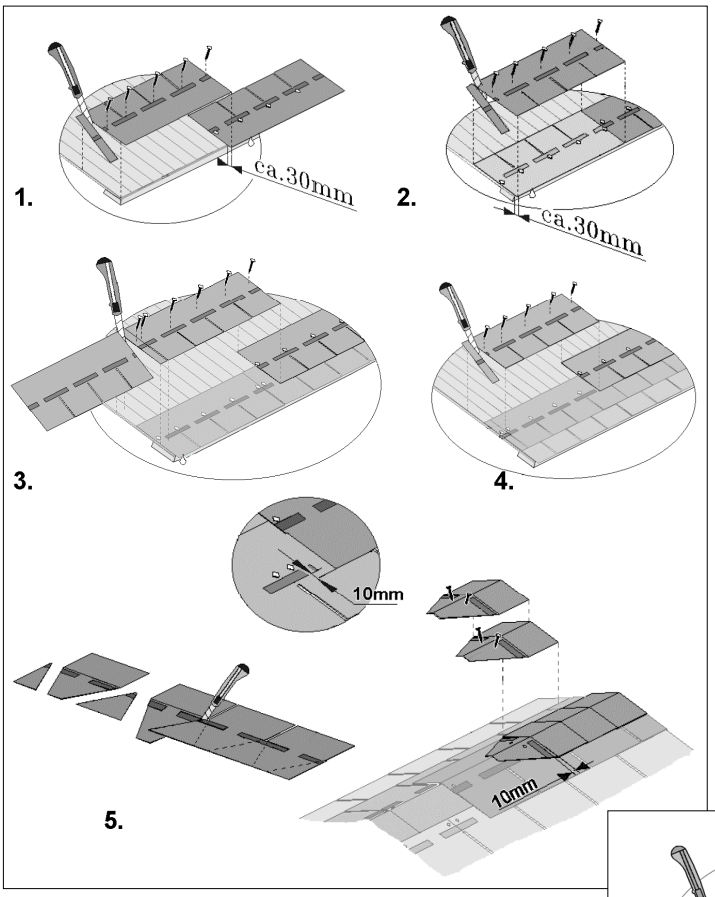

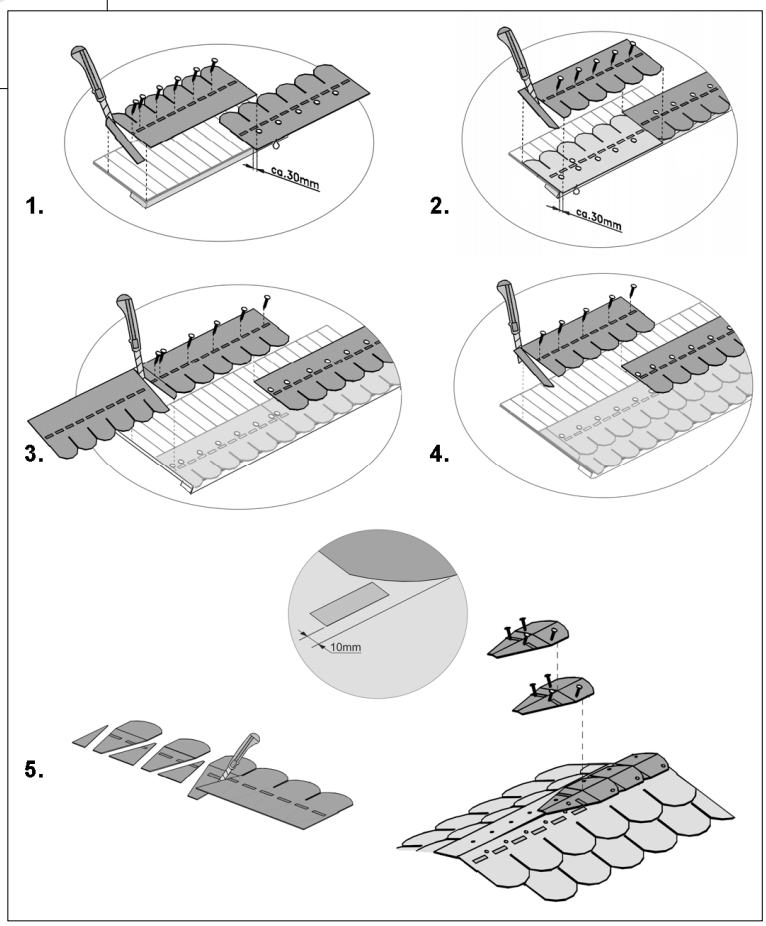

 © Copyright HRB3662

weka Holzbau GmbH,
Johannesstr. 16
D-17034 Neubrandenburg
Tel.: 0395 42908-0
Fax: 0395 42908-83
E-Mail: Info@weka-Holzbau.com

MA Art.-Nr.: 800.0286.16.48

 © Copyright HRB3662